Linergy BZ
Multistandard power busbar system up to 630 A

In enclosures, when space saving and fast connection are a strong requirement

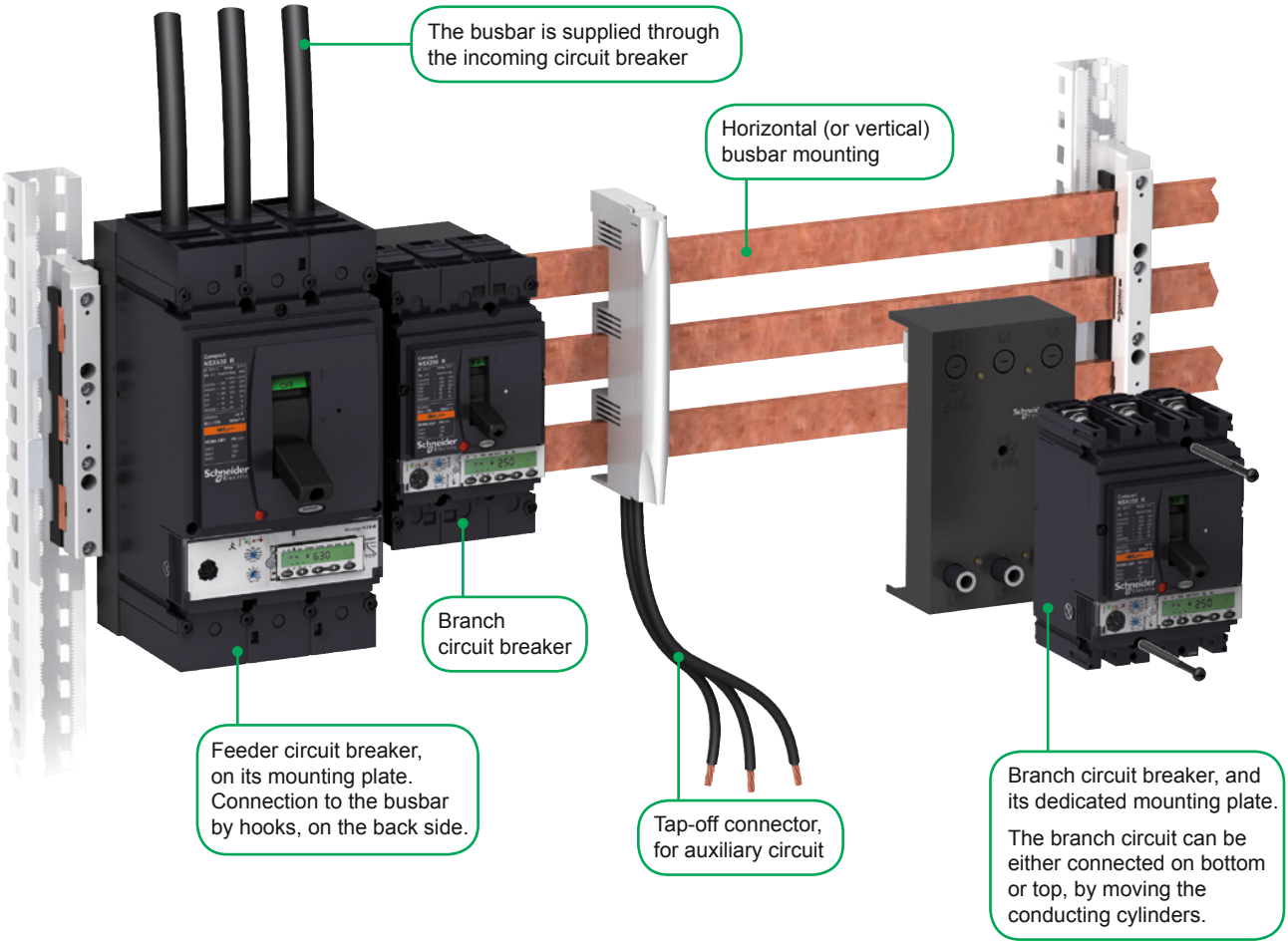

Ideal for industrial process application

Advantages

- Considerable space saving: components are directly mounted on the busbar
- Quick connection, deconnection: a metal hook combines mechanical fastening and electrical connection
- Multi standard: conform to IEC and UL standards

Detailed view: back face of a mounting plate

- Mounting plates, for Compact NSX, Powerpact and GV7 circuit breakers
- Compatible with bars:
  - Height 12, 15, 20, 25 or 30 mm,
  - Width 5 or 10 mm

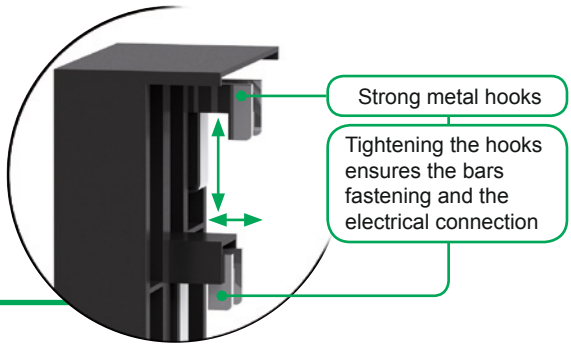

Linergy BZ
Multistandard power busbar system up to 630 A

In control switchboards, when space saving, quick mounting and replacement are required

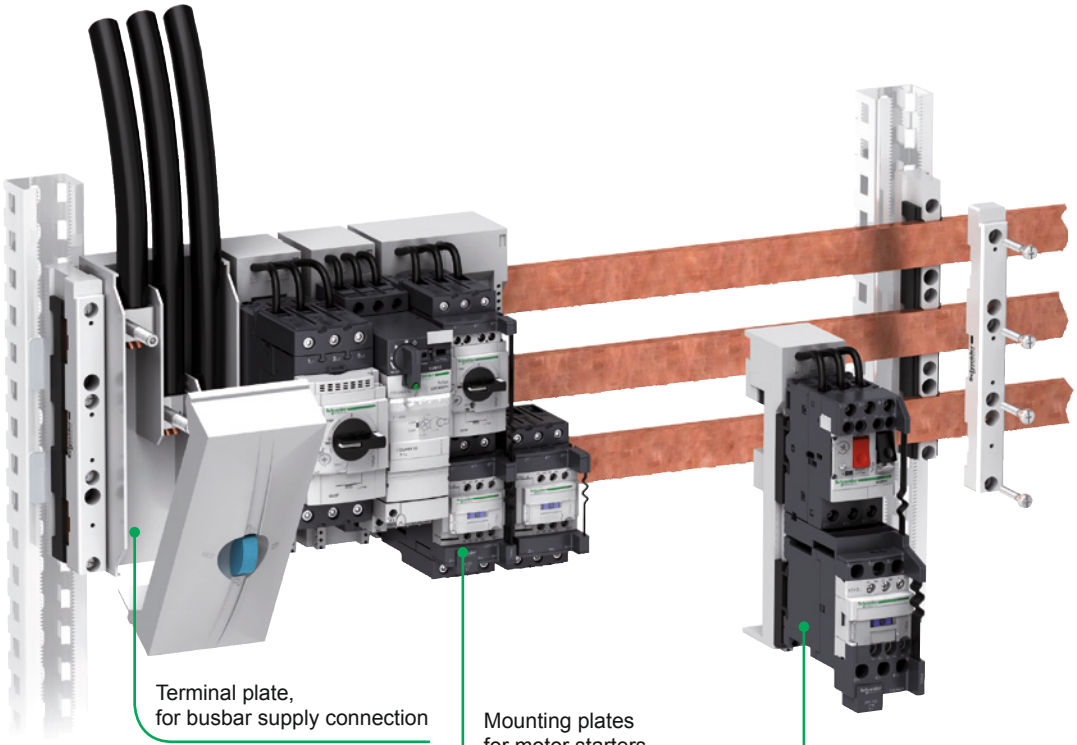

Advantages

- Considerable space saving: components are directly mounted on the busbar
- Large choice of mounting plates (for GV2, GV3 motor circuit breakers and assemblies, GV7, TeSys U)
- Quick connection, deconnection (power off): clip-on mounting plates
- Vibration resistant busbar connections: no periodical re-tightening required

Detailed view: back face of a motor starter mounting plate

- A reliable electrical contact is ensured by copper blades
- The blue part locks the mounting plate on the busbar, compatibility is provided with the standard profiles:
  - Height 12, 15, 20, 25 or 30 mm,
  - Width 5 or 10 mm

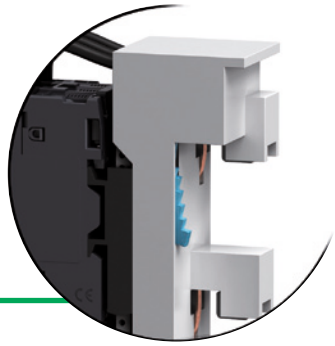

Linergy BZ
Multistandard power busbar system

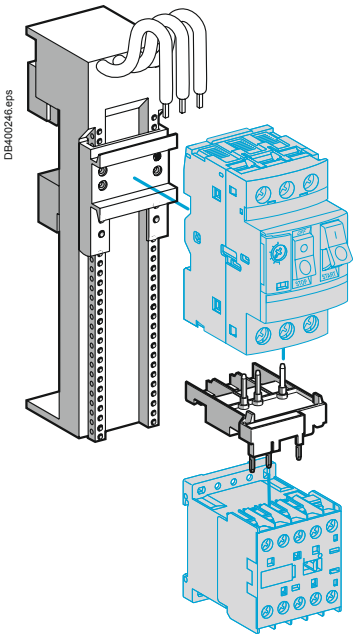

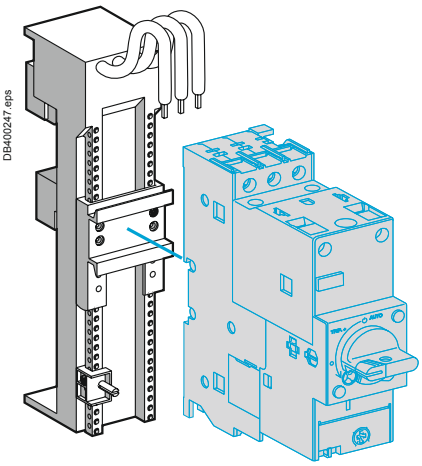

Installation examples.

Description

The TeSys mounting plate system for busbars simplifies the installation of motor feeder components used in your electrical installations.
Power distribution is performed by a busbar.

The mounting plates are fitted directly on this busbar, by snap-on mounting, thus implementing mechanical and electrical connection.

This system offers numerous benefits:
- space saving in cabinets
- fast, safe and reliable electrical and mechanical connection
- easy connection
- protection for users against electric shocks by direct contacts (IP20) by using busbars and end covers
- equipment flexibility and modularity
- increased equipment availability: easier maintenance
- power supply without drilling (connectors) from 1.5 to 120 mm^2.

Busbars system
The busbar interaxis is 60 mm. Depending on the cross section of the bars, the busbar can withstand a maximum current of 630 A.

Note: *The copper bars forming the busbar are not part of the Linergy BZ offer. They are not supplied by us. Their selection depends on the maximum current needed for your installation (see next page).*

Support for 3P and 4P busbar (1)
These are available in 2 versions: three-pole and four-pole.
For applications having to comply with the UL standard, use the LA9ZX01508 support (3P only).

The mounting plates (2)
These allow mounting of the power feeder components consisting of:
- a GV2 motor circuit breaker, mounted alone or in conjunction with a TeSys K or TeSys D contactor
- a GV3 motor circuit breaker, mounted alone or in conjunction with a TeSys D contactor
- a TeSys U starter-controller
- a TeSys GV7 motor circuit breaker
- an LD63 integral contactor-circuit breaker
- a NSX100-250 or NSX400-630 A circuit breaker
- H/J/L PowerPact circuit breaker frame.

Accessories
Accessories complete the offer:
- covers (3) for 5 and 10 mm bars
- end covers (4)
- a base plate (5)
- 1P connectors (6)
- 3P connectors on mounting plate (7)
- a spring terminal 3P connection module (8).

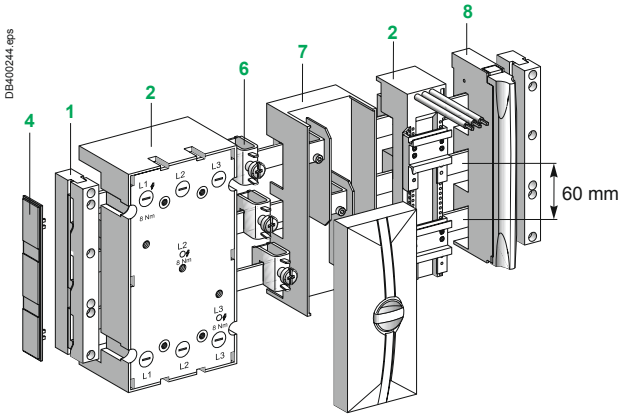

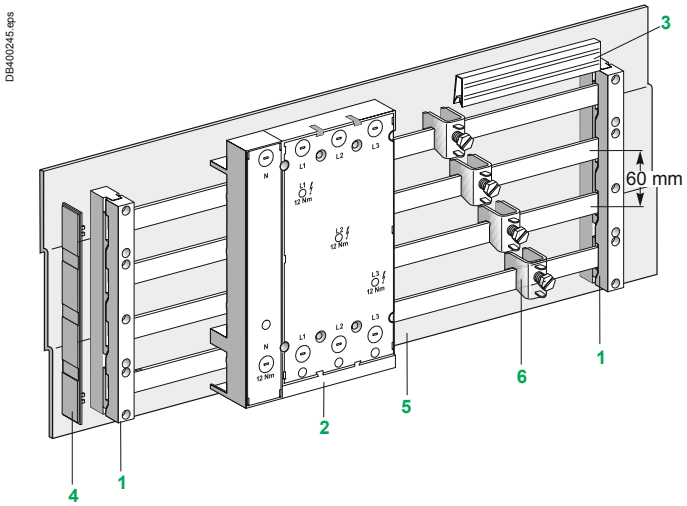

Linergy BZ
Multistandard power busbar system
Busbar support

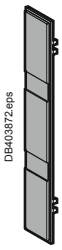

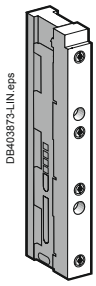

LA9ZX01573 *LA9ZX01495*

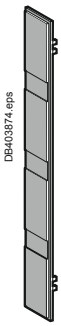

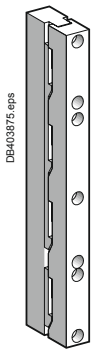

LA9ZX01131 *LA9ZX01485*

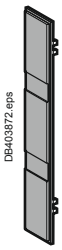

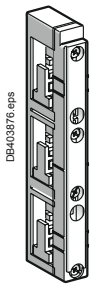

LA9ZX01573 *LA9ZX01508*

IEC busbar supports and accessories

		Min. order qty	Unit reference
3-pole	For 12, 15, 20, 25, 30 x 5/10 mm busbars	10	**LA9ZX01495**
	End covers for 3-pole busbar support	10	**LA9ZX01573**
4-pole	For 12, 15, 20, 25, 30 x 5/10 mm busbars	10	**LA9ZX01485**
	End covers for 4-pole busbar support (5 left, 5 right)	10	**LA9ZX01131**

UL busbar supports and accessories

		Min. order qty	Unit reference
3-pole	For 12, 20, 30 x 5/10 mm busbars	10	**LA9ZX01508**
	Base plate 240 x 700	2	**LA9ZX01515**
	End covers for busbar support	10	**LA9ZX01573**

Other accessories

		Min. order qty	Unit reference
Covers, length 1 m			
	For 12-30 x 5 mm busbars	10	**LA9ZX01244**
	For 12-30 x 10 mm busbars	10	**LA9ZX01245**

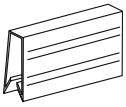

Busbar supports characteristics

		LA9ZX01495 and LA9ZX01485 (IEC 60439-1)							
Bar dimensions compatibility	mm	12 x 5	15 x 5	20 x 5	25 x 5	30 x 5	12 x 10	20 x 10	30 x 10
Max. rated operating current	A	200	250	320	400	450	360	520	630
Min. peak permissible rated current	kA	30	30	30	30	45	35	35	53
Distance max. between 2 busbars supports	mm	570	570	570	570	570	570	570	570
Degree of protection	IP	20 (with cover LA9ZX01244 or LA9ZX01245)							
Thermal resistance	°C	125							
Rated current frequency	Hz	50/60							
Rated insulation voltage	V	690							
Rated operating voltage	V	690							

			LA9ZX01508 (UL 508 A)					
Bar dimensions compatibility		mm	12 x 5	20 x 5	30 x 5	12 x 10	20 x 10	30 x 10
Rated operating current		A	150	362	500	300	564	630
I_{eff} (RMS) surge current		kA	18	18	22 - 25	18	18	22 - 25
SCCR (protected by Compact NSX circuit breaker)	250 A 480 V AC	kA	65	-	-	65	-	-
	250 A 600 V AC		25	-	-	25	-	-
	400 A 480 V AC		-	65	65	-	65	65
	400 A 600 V AC		-	35	35	-	35	35
	500 A 480 V AC		-	-	65	-	-	65
	600 A 600 V AC		-	-	35	-	-	
	600 A 480 V AC		-	-	50	-	-	50
	600 A 600 V AC		-	-	25	-	-	25
SCCR (protected by fuses Class J or T ...)	400 A 480 V AC		100	100	100	100	100	100
	500 A 480 V AC		-	-	100	-	-	100
	500 A 600 V AC		-	-	100	-	-	100
Distance max. between 2 busbars supports (busbar protected)		mm	400	800	800	400	800	800
Degree of protection		IP	20 (with cover LA9ZX01244 or LA9ZX01245)					
Thermal resistance		°C	125					
Rated current frequency		Hz	50/60					
Rated operating voltage		V	600					

Determining the spacing between busbar supports (LA9ZX01495 and LA9ZX01485), according to IEC 60439-1 (1)

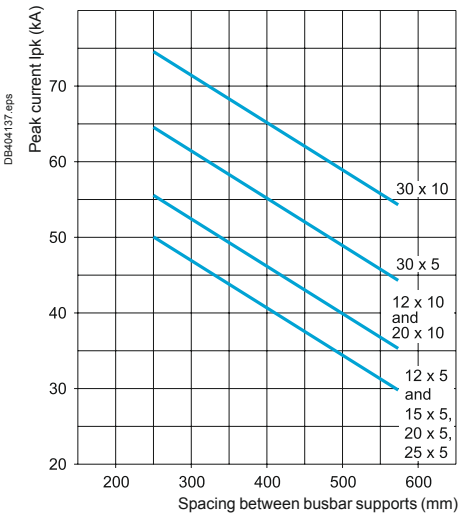

Short-circuit strength diagram according to UL845 (LA9ZX01508)

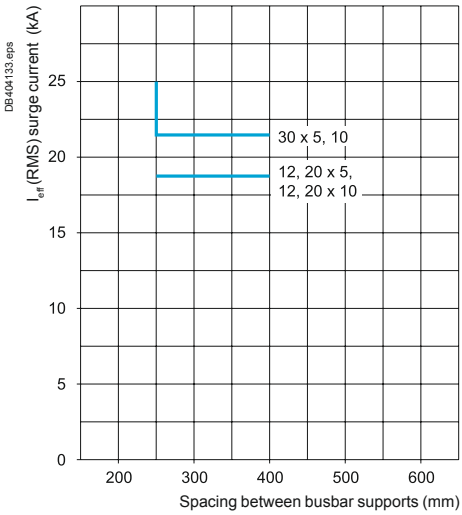

(1) Depending on the short-circuit current.

Load resistance of busbar assemblies in IEC applications

For an ambient temperature of 35 °C and a busbar temperature of 65 °C

Cross section	**mm²**	**12 x 5**	**15 x 5**	**20 x 5**	**25 x 5**	**30 x 5**	**12 x 10**	**20 x 10**	**30 x 10**
Permissible current	**A**	200	250	320	400	450	360	520	630

In the event of changes in climatic conditions, the following curve indicates the correction factor K_2 to be applied.

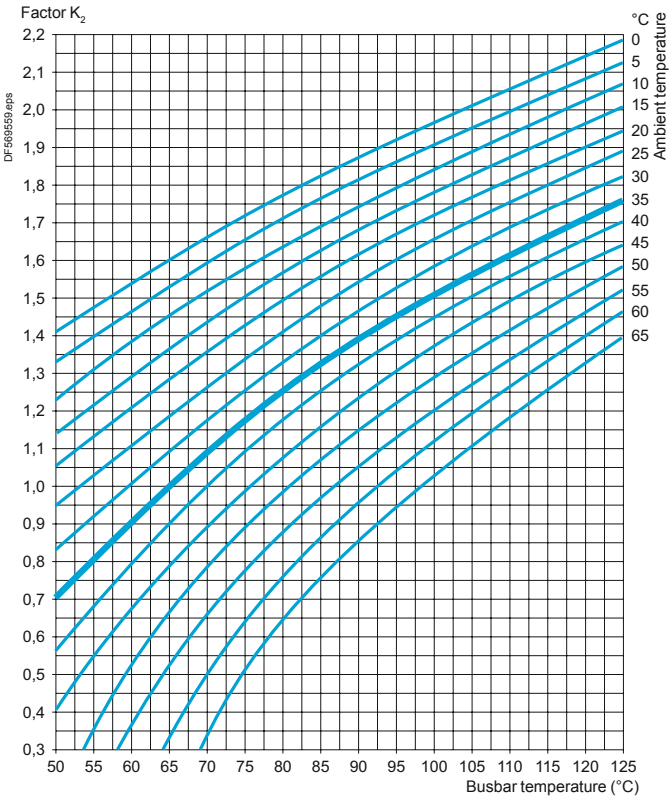

Example: In normal operating conditions, a tinned busbar of 30 x 10 can permanently withstand 630 A.

For a load of 800 A, the correction factor K_2 to be applied will be 1.3 ($\frac{800\ A}{630\ A}$). As a result, the temperature rise in the busbars will reach 82.5 °C.

Linergy BZ

Multistandard power busbar system
Mounting plates for molded case breakers

LA9ZA32627

For TeSys integral contactor-circuit breakers

Operating current AC-3 440 V	Protection by contactor-circuit breaker	Mounting plate l x h x d	Min. order qty	Unit reference
Mounting plate, 1-way				
63 A	LD1, LD4 LD●	108 x 260 x 63	1	**LA9ZA32627**

For TeSys GV7 motor circuit breakers

Operating current AC-3 440 V	Protection by contactor-circuit breaker	Mounting plate l x h x d	Min. order qty	Unit reference
Mounting plate, 1-way				
80 A	GV7	104 x 190 x 63	1	**LV429372**

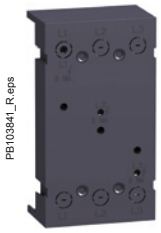

LV429372

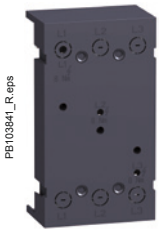

LA9ZA32600

For Compact NSX circuit breakers

Ratings		Mounting plate l x h x d	Min. order qty	Unit reference
100-250 A	Mounting plate for 3P circuit breakers	104 x 190 x 63	1	**LV429372**
	Mounting plate for 4P circuit breakers	139 x 251 x 63	1	**LV429373**
400-630 A	Mounting plate for 3P circuit breakers	139 x 270 x 63	1	**LV432623**
	Mounting plate for 4P circuit breakers	184 x 284 x 63	1	**LV432624**

LV432624

For PowerPact 3P circuit breakers

Ratings		Mounting plate l x h x d	Min. order qty	Unit reference
60-100-150 A	Mounting plate for H frame circuit breakers	104 x 190 x 63	1	**LA9ZA32600**
250 A	Mounting plate for J frame circuit breakers	104 x 190 x 63	1	**LV429372**
250-400-600 A	Mounting plate for L frame circuit breakers	139 x 270 x 63	1	**LV432623**

Characteristics of busbar mounting plates

Type of mounting plate		LA9ZA32621 LA9ZA32622	LA9ZA32427 LA9ZA32428 LA9ZA32434 LA9ZA32623 LA9ZA32442 LA9ZA32443	LA9ZA32624 LA9ZA32625 LA9ZA32626 LA9ZA32627	LV429372 LV429373	LV432623 LV432624	LA9ZA32600
Degree of protection as per IEC 60529	IP	20					
Rated insulation voltage	V	690					
Permissible current	A	25	32	63	80-100-250	400-630	60-100-150
Peak rated current	kA	50	50 (1)	50	50	50	50
SCCR (UL) with Compact NSX circuit breaker protection	mm²	The reinforced breaking capacity due to cascading in circuit breaker combination is maintained					
Conductor cross section (color: black)	mm²	4	6	10	NA		
	AWG	12	10	8	NA		
Type of conductor insulating material	PVC	105°			NA		

(1) 35 kA with LUB12 for LA9ZA32427 and LA9ZA32428.

Linergy BZ

Multistandard power busbar system
Mounting plates for Tesys devices

LA9ZA32621

LA9ZA32442

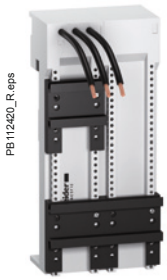

LA9ZA32622
LA9ZA32623

LA9ZA32427

LA9ZA32428

LA9ZA32624

LA9ZA32625

LA9ZA32626

For TeSys GV2 motor circuit breakers

Operating current AC-3 440 V	Protection by motor circuit breaker	For contactor	Mounting plate l x h x d	Min. order qty	Unit reference
Mounting plate, 1-way					
25 A	GV2 ME GV2 P GV2 LE	LC1 D LC1 K LP4 K06-K12	45 x 200 x 63	4	**LA9ZA32621**
32 A	GV2 LE	LC1 D	63 x 200 x 63	4	**LA9ZA32443**
Mounting plate, 2-way (3)					
25 A	GV2 ME GV2 P GV2 LE	LC1 D LC1 K LP4 K06-K12	90 x 200 x 63	2	**LA9ZA32622**
32 A	GV2 ME GV2 P GV2 LE	LC1 D	45 x 200 x 63	4	**LA9ZA32434**
			54 x 200 x 63	4	**LA9ZA32442**
			90 x 200 x 63	2	**LA9ZA32623**

TeSys U starter-controllers

Operating current AC-3 440 V	Protection by power base		Mounting plate l x h x d	Min. order qty	Unit reference
Mounting plate, 1-way					
32 A	LUB12, LUB32		45 x 200 x 63	4	**LA9ZA32427**
Mounting plate, 2-way					
32 A	LUB12, LUB32		45 x 260 x 63	4	**LA9ZA32428**

For TeSys GV3 motor circuit breakers

Operating current AC-3 440 V	Protection by power base	For contactor	Mounting plate l x h x d	Min. order qty	Unit reference
Mounting plate, 1-way (1)					
63 A	GV3 P	–	54 x 200 x 63	4	**LA9ZA32624**
	GV3 P	LC1 D40A…65 A	54 x 260 x 63	4	**LA9ZA32625**
Mounting plate, 2-way (1) (2)					
63 A	GV3 P	LC2 D40A…65 A	117 x 260 x 63	4	**LA9ZA32626**

(1) Contactor-circuit breaker combination without additional part.
(2) Use the LAD 9R3 kit for the execution of changeover contactors.
(3) Use the LAD 9R1 or LAD 9R1V kit for the execution of changeover contactors.

***Note:** the mounting plate rails can be shifted vertically in 1.25 mm increments.*

Linergy BZ
Multistandard power busbar system
Terminals, connection module

PB112437_R.eps

LA9ZX01285

PB112438_R.eps

LA9ZX01287

Terminals

	I max		Set of	Unit reference
One-pole for flat bars, 5 mm	270 A	Capacity 4-35 mm²	50	LA9ZX01285
	400 A	Capacity 16-70 mm²	25	LA9ZX01287
3P cover, width 84 mm			10	LA9ZX01413

PB112439_R.eps

LA9ZX01413

PB112434_R.eps

LA9ZX01243

Terminals on mounting plate

	I max		Min. order qty	Unit reference
3P, on mounting plate + cover, for 12 x 5 to 30 x 10 busbars, width 81 mm	440 A	Capacity 35-120 mm²	1	LA9ZX01243
3P, on mounting plate + cover, for 20 x 5 to 30 x 10 busbars, width 135 mm	560 A	Capacity 95-300 mm²	1	LA9ZX01754

PB112444_R.eps

LA9ZX01563

Connection module

	I max		Min. order qty	Unit reference
3P, spring terminal connection + cover, for 12 x 5 to 30 x 10 busbars, width 20 mm	80 A	Capacity 1.5-16 mm²	8	LA9ZX01563

Connection by connectors

		LA9ZX01285		LA9ZX01287		LA9ZX01243		LA9ZX01754		LA9ZX01563	
		Min.	Max.	Min.	Max.	Min.	Max.	Min.	Max.	Min.	Max.
Flexible wire	mm²	4	35	16	70	35	120	95	300	1.5	16
Multi-strand wire	mm²	4	35	16	70	35	120	95	300	1.5	16
Rigid wire	mm²	4	35	–	–	–	–	-	-	1.5	16
For bars	mm	... x 5		... x 5		... x 5-10		... x 5-10		... x 5-10	
Cover		LA9ZX01413		LA9ZX01413		Supplied with cover		Supplied with cover		Supplied with cover	