Altivar 61

Variable speed drives for synchronous and asynchronous motors

Programming Manual

Software V5.8

02/2013

1760649

www.schneider-electric.com

Contents

Before you begin 4
Documentation structure 5
Software enhancements 6
Steps for setting up the drive 9
Factory configuration 10
Setup – Preliminary recommendations 11
Graphic display terminal 14
- Description of the terminal 14
- Description of the graphic screen 15
- First power-up – [5. LANGUAGE] menu 18
- Subsequent power ups 19
- Programming: Example of accessing a parameter 20
- Quick navigation 21

Integrated display terminal 24
- Functions of the display and the keys 24
- Accessing menus 25
- Accessing menu parameters 26

[2. ACCESS LEVEL] (LAC-) 27
Structure of parameter tables 30
Interdependence of parameter values 31
Finding a parameter in this document 32
[1.1 SIMPLY START] (SIM-) 33
[1.2 MONITORING] (SUP-) 39
[1.3 SETTINGS] (SEt-) 48
[1.4 MOTOR CONTROL] (drC-) 64
[1.5 INPUTS / OUTPUTS CFG] (I-O-) 81
[1.6 COMMAND] (CtL-) 110
[1.7 APPLICATION FUNCT.] (FUn-) 123
[1.8 FAULT MANAGEMENT] (FLt-) 189
[1.9 COMMUNICATION] (COM-) 215
[1.10 DIAGNOSTICS] 219
[1.11 IDENTIFICATION] 221
[1.12 FACTORY SETTINGS] (FCS-) 222
[1.13 USER MENU] (USr-) 225
[1.14 PROGRAMMABLE CARD] (PLC-) 226
[3. OPEN / SAVE AS] 227
[4. PASSWORD] (COd-) 229
[6 MONITORING CONFIG.] 231
[7 DISPLAY CONFIG.] 235
[MULTIPOINT SCREEN] 240
Maintenance 241
Faults – Causes – Remedies 242
User settings tables 248
Index of functions 250
Index of parameter codes 251

Read and understand these instructions before performing any procedure with this drive.

DANGER

HAZARD OF ELECTRIC SHOCK, EXPLOSION, OR ARC FLASH

- Only appropriately trained persons who are familiar with and understand the contents of this manual and all other pertinent product documentation and who have received safety training to recognize and avoid hazards involved are authorized to work on and with this drive system. Installation, adjustment, repair and maintenance must be performed by qualified personnel.
- The system integrator is responsible for compliance with all local and national electrical code requirements as well as all other applicable regulations with respect to grounding of all equipment.
- Many components of the product, including the printed circuit boards, operate with mains voltage. Do not touch. Use only electrically insulated tools.
- Do not touch unshielded components or terminals with voltage present.
- Motors can generate voltage when the shaft is rotated. Prior to performing any type of work on the drive system, block the motor shaft to prevent rotation.
- AC voltage can couple voltage to unused conductors in the motor cable. Insulate both ends of unused conductors of the motor cable.
- Do not short across the DC bus terminals or the DC bus capacitors or the braking resistor terminals.
- Before performing work on the drive system:
  - Disconnect all power, including external control power that may be present.
  - Place a "Do Not Turn On" label on all power switches.
  - Lock all power switches in the open position.
  - Wait 15 minutes to allow the DC bus capacitors to discharge. The DC bus LED is not an indicator of the absence of DC bus voltage that can exceed 800 Vdc.
  - Measure the voltage on the DC bus between the DC bus terminals using a properly rated voltmeter to verify that the voltage is < 42 Vdc.
  - If the DC bus capacitors do not discharge properly, contact your local Schneider Electric representative.
- Install and close all covers before applying voltage.

Failture to follow these instructions will result in death or serious injury.

CAUTION

DAMAGED EQUIPMENT

Do not operate or install any drive that appears damaged.
Failure to follow this instruction can result in equipment damage.

Documentation structure

The following Altivar 61 technical documents are available on the Schneider Electric website (www.schneider-electric.com).

Installation Manual

This bulletin contains complete mounting and wiring instructions.

Programming Manual

This describes the functions, parameters and use of the drive terminal (integrated display terminal and graphic display terminal).
The communication functions are not described in this manual, but in the manual for the bus or network used.

Communication Parameters Manual

This manual describes:

- The drive parameters with specific information for use via a bus or communication network.
- The operating modes specific to communication (state chart).
- The interaction between communication and local control.

Manuals for Modbus®, CANopen®, Ethernet™, Profibus®, INTERBUS, Uni-Telway, and Modbus® Plus, etc.

These manuals describe the assembly, connection to the bus or network, signaling, diagnostics, and configuration of the communication-specific parameters via the integrated display terminal or the graphic display terminal.
They also describe the communication services of the protocols.

ATV 38/ATV 61 Migration Manual

This manual describes the differences between the Altivar 61 and the Altivar 38 and explains how to replace an Altivar 38, including how to replace drives communicating on a bus or a network.

ATV 78/ATV 61/71 Migration Manual

This manual describes the differences between the Altivar 61/71 and Altivar 78 and explains how to replace an Altivar 78.

Software enhancements

Since the Altivar ATV 61 was first launched, it has benefited from the addition of several new functions. The software version is now V5.8. Although this documentation relates to version V5.8, it can still be used with earlier versions.
The software version is indicated on the nameplate attached to the body of the drive.

Enhancements made to version V1.2 in comparison to V1.1

New parameters and functions

Option of operating with a BACnet communication card

[1.8 FAULT MANAGEMENT] (FLt-) menu

- The external fault [EXTERNAL FAULT] (EtF-) page 199 can now be configured in positive or negative logic via [External fault config.] (LEt).

Enhancements made to version V1.4 in comparison to V1.2

Factory setting

Note: In versions V1.1 and V1.2, analog output AO1 was assigned to the motor frequency. In the new version, this output is not assigned.
With the exception of this parameter, the factory setting of versions V1.1 and V1.2 remain the same in the new version. The new functions are inactive in the factory setting.

New parameters and functions

[1.2 MONITORING] (SUP-) menu

Addition of states and internal values relating to the new functions described below.

[1.3 SETTINGS] (SEt-) menu

- [High torque thd.] (ttH) page 60
- [Low torque thd.] (ttL) page 60
- [Pulse warning thd.] (FqL) page 60
- [Freewheel stop Thd] (FFt) page 61

[1.4 MOTOR CONTROL] (drC-) menu

- Extension of the following configurations to all drive ratings (previously limited *to* 45 kW (60 HP) for ATV61●●●M3X and to 75 kW (100 HP) for ATV61●●●N4): synchronous motor [Sync. mot.] (SYn) page 69, sinus filter [Sinus filter] (OFI) page 77, noise reduction [Noise reduction] (nrd) page 78, braking balance [Braking balance] (bbA) page 80.

[1.5 INPUTS / OUTPUTS CFG] (I-O-) menu

- [AI net. channel] (AIC1) *page* 91
- New options for assigning relays and logic outputs, page 96: torque greater than high threshold, torque less than low threshold, motor in forward rotation, motor in reverse rotation, measured speed threshold attained.
- Analog output AO1 can now be used as a logic output and assigned to relay functions and logic outputs, page 102.
- New option of modifying the scale of analog outputs, page 104, using the parameters [Scaling AOx min] (ASLx) and [Scaling AOx max] (ASHx).
- New options for assigning analog outputs page 105: signed motor torque and measured motor speed.
- New options for assigning alarm groups page 109: torque greater than high threshold, torque less than low threshold, measured speed threshold attained.

[1.7 APPLICATION FUNCT.] (Fun-) menu

- The summing, subtraction and multiplication reference functions can now be assigned to virtual input [Network AI] (AIU1) page 130.
- New parameter [Freewheel stop Thd] (FFt) page 135 used to adjust a threshold for switching to freewheel at the end of a stop on ramp or fast stop.
- The torque limitation [TORQUE LIMITATION] (tOL-) page 166 can now be configured in whole % or in 0.1% increments using [Torque increment] (IntP) and assigned to virtual input [Network AI] (AIU1).
- New Damper control function using the [DAMPER MANAGEMENT] (dAM-) menu, page 174.
- Parameter switching [PARAM. SET SWITCHING] (MLP-) page 176 can now be assigned to attained frequency thresholds [Freq. Th. attain.] (FtA) and [Freq. Th. 2 attain.] (F2A).

[1.8 FAULT MANAGEMENT] (FLt-) menu

- Option to reinitialize the drive without turning it off, via [Product reset] (rP) page 192.
- Option to reinitialize the drive via a logic input without turning it off, using [Product reset assig.] (rPA) page 192.
- The option to configure the "output phase loss" fault [Output Phase Loss] (OPL) page 196 to [Output cut] (OAC) has been extended to all drive ratings (previously limited *to* 45 kW (60 HP) for ATV61●●●M3X and 75 kW (100 HP) for ATV61●●●N4).
- New monitoring function based on speed measurement using "Pulse input" input page 206, via the [FREQUENCY METER] (FqF-) menu.
- The braking unit short-circuit fault can now be configured using [Brake res. fault Mgt] (bUb) page 208.
- The [Damper stuck] (Fd1) fault in the Damper control function can be configured via [DAMPER FAULT MGT.] (FdL-) page 213.

[7 DISPLAY CONFIG.] menu

- Addition, in [7.4 KEYPAD PARAMETERS] page 239, of the [Keypad contrast] and [Keypad stand-by] parameters to adjust the contrast and stand-by mode of the graphic display unit.

Enhancements made to version V1.5 in comparison to V1.4

Extension of the range with the addition of **ATV61●●●●Y** drives for 500 to 690 V supplies.
There are no new parameters, but the adjustment ranges and factory settings of some parameters have been adapted to the new voltages.

[1.5 INPUTS / OUTPUTS CFG] (I-O-) menu

Increased adjustment range for the relay and logic output delay parameters: 0 to 60000 ms instead of 0 to 9999 ms.

[1.7 APPLICATION FUNCT.] (Fun-) menu

- New parameter [Conf.sensor flow] (LnS) page 183, used to configure the zero flow sensor for positive or negative logic.

Enhancements made to version V1.6 in comparison to V1.5

The communication option card APOGEE FLN P1 (VW3 A3 314) is fully supported with the version V1.6 and above of the Altivar 61 software.

Enhancements made to version V1.8 in comparison to V1.6

[7 DISPLAY CONFIG.] menu

- Addition in [7.4 KEYPAD PARAMETERS] page 235 of [Power up menu].This parameter allows to choose the menu which displays on the drive on power up.

Enhancements made to version V2.1 in comparison to V1.8

[1.7 APPLICATION FUNCT.] (Fun-) menu

New parameters and functions

- New parameter [Regen. Conenction] (OIr) page 187. With this parameter it is possible to retun the braking energy to the mains.
- New parameter [Dis. operat opt code] (dOtd) page 136.

Enhancements made to version V5.8 in comparison to V2.1

Motor frequency range

The maximum output frequency has been limited to 599 Hz

[1.5 INPUTS / OUTPUTS CFG] (I-O-) menu

New parameter and function

New methods of assigning logic output, [R1 Assignment] (r1) page 97 : [Drive start] (Strt).

New factory setting

- [Motor control type] (Ctt) page 69 has been modified, [Energy Sav.] (nLd) to [V/F 2pts] (UF2).
- [IGBT test] (Strt) page 201 has been modified, [No] (nO) to [Yes] (YES).
- [Dis. operat opt code] (dOtd) page 136 has been modified, [Freewheel] (nSt) to [Ramp stop] (rMP).

1.7 APPLICATION FUNCT.] (FUn-) menu

New parameter and function

- New parameter [Pmax Motor] (tPMM) page 167
- New parameter [Pmax Generator] (tPMG) page 167

INSTALLATION

☐ 1 Consult the Installation Manual

PROGRAMMING

Procedure applicable if the factory configuration, page 10, and use of the [SIMPLY START] (SIM-) menu only are sufficient for the application.

■ 2 Power up without run command

- ☐ **If you are using a separate power supply for the control section, follow the instructions on page 11.**

■ 3 Select the language, if the drive has a graphic display terminal

■ 4 Configure the [SIMPLY START] (SIM-) menu

- ☐ **2-wire or 3-wire control**
- ☐ **Macro configuration**
- ☐ **Motor parameters**
  - ☞ ***Perform an auto-tuning operation***
- ☐ **Motor thermal current**
- ☐ **Acceleration and deceleration ramps**
- ☐ **Speed variation range**

■ 5 Start

Tips:

- **Before you start programming, complete the user setting tables, page 248.**
- **Perform an auto-tuning operation to optimize performance, page 37.**
- **If you get lost, return to the factory settings, page 224.**

☞ ***Note: Check that the wiring of the drive is compatible with its configuration.***

Factory configuration

Drive factory settings

The Altivar 61 is factory-set for the most common operating conditions:

- Macro-configuration: Pumps/fans
- **Motor** frequency: 50 Hz
- Energy-saving variable torque applications
- Normal stop mode on deceleration ramp
- Stop mode in the event of a fault: freewheel
- Linear, acceleration and deceleration ramps: 3 seconds
- Low speed: 0 Hz
- High speed: 50 Hz
- Motor thermal current = rated drive current
- Standstill injection braking current = 0.7 x rated drive current, for 0.5 seconds
- No automatic starts after a fault
- Switching frequency 2.5 kHz or 12 kHz depending on drive rating
- Logic inputs:
  - LI1: forward (1 operating direction), 2-wire control on transition
  - LI2: inactive (not assigned)
  - LI3: switching of 2nd speed reference
  - LI4: fault reset
  - LI5, LI6: inactive (not assigned)
- Analog inputs:
  - AI1: 1st speed reference 0 +10 V
  - AI2: 2nd speed reference 0-20 mA
- Relay R1: The contact opens in the event of a fault (or drive off)
- Relay R2: The contact closes when the drive is in operation
- Analog output AO1: 0-20 mA, inactive (not assigned)

If the above values are compatible with the application, the drive can be used without changing the settings.

Option card factory settings

The option card inputs/outputs are not factory-set.

Turning on and configuring the drive

DANGER

UNINTENDED EQUIPMENT OPERATION

- Before turning on and configuring the Altivar 61, check that the PWR (POWER REMOVAL) input is deactivated (at state 0) in order to prevent unintended operation.
- Before turning on or on exiting the configuration menus, check that the inputs assigned to the run command are deactivated (at state 0) since they can cause the motor to start immediately.

Failure to follow these instructions will result in death or serious injury.

CAUTION

INCOMPATIBLE LINE VOLTAGE

Before turning on and configuring the drive, ensure that the line voltage is compatible with the supply voltage range shown on the drive nameplate. The drive may be damaged if the line voltage is not compatible.

Failure to follow these instructions can result in equipment damage.

Separate control section power supply

Only supply power to the power section the next time the drive is powered up when:
A) The drive control section is powered independently of the power section (P24 and 0V terminals).
B) Whenever an option card is added or replaced.

Power switching via line contactor

CAUTION

RISK OF EQUIPMENT DAMAGE

- Avoid operating the contactor frequently (premature ageing of the filter capacitors).
- Cycle times < 60 s may result in damage to the pre-charge resistor.

Failure to follow these instructions can result in equipment damage.

User adjustment and extension of functions

- The display unit and buttons can be used to modify the settings and to extend the functions described in the following pages.
- **Return to factory settings** is made easy by the [1.12 FACTORY SETTINGS] (FCS-) menu, see page 222.
- There are three types of parameter:
  - Display: Values displayed by the drive
  - Adjustment: Can be changed during operation or when stopped
  - Configuration: Can only be modified when stopped and no braking is taking place. Can be displayed during operation

DANGER

UNINTENDED EQUIPMENT OPERATION

- Check that changes made to the settings during operation do not present any danger.
- We recommend stopping the drive before making any changes.

Failure to follow these instructions will result in death or serious injury.

Starting

Important:

- In factory settings mode, the motor can only be supplied with power once the “forward”, “reverse” and “DC injection stop” commands have been reset:
  - On power-up or a manual fault reset or after a stop command

  If they have not been reset, the drive will display “nSt” but will not start.
- If the automatic restart function has been configured ([Automatic restart] (Atr) parameter in the [1.8-FAULT MANAGEMENT] (FLt-) menu, see page 193), these commands are taken into account without a reset being necessary.

Test on a low power motor or without a motor

- In factory settings mode, [Output Phase Loss] detection (OPL) page 196 is active (OPL = YES). To check the drive in a test or maintenance environment without having to switch to a motor with the same rating as the drive (particularly useful in the case of high power drives), deactivate [Output Phase Loss] (OPL = no).
- Set [Motor control type] (Ctt) = [V/F 2pts] (UF2) or [V/F 5pts] (UF5) or [U/F Quad.] (UFq) ([1.4-MOTOR CONTROL] (drC-) menu, see page 69)

CAUTION

UNINTENDED EQUIPMENT OPERATION

Motor thermal protection will not be provided by the drive if the motor current is less than 0.2 times the rated drive current. Provide an alternative means of thermal protection.

Failure to follow these instructions can result in equipment damage.

Using motors in parallel

- Set [Motor control type] (Ctt) = [V/F 2pts] (UF2) or [V/F 5pts] (UF5) or [U/F Quad.] (UFq) ([1.4-MOTOR CONTROL] (drC-) menu, see page 69)

CAUTION

UNINTENDED EQUIPMENT OPERATION

Motor thermal protection is no longer provided by the drive. Provide an alternative means of thermal protection on every motor.

Failure to follow these instructions can result in equipment damage.

ATV61●●●Y - Network which presents often under voltage

To assure an optimal running of an ATV61●●●Y used on network which presents often under voltage (network voltage contained between 425 V and 446 V), it is necessary to adjust [Prevention level] (UPL) = 383 V ([1.8-FAULT MANAGEMENT] (FLt-) menu, see page 201).

Using motor with nominal voltage lower than drive supply voltage

- Configure [Vector Control 2pt] (UC2) = [Yes] (YES) ([1.4-MOTOR CONTROL] (drC-) menu, see page 71)

CAUTION

UNINTENDED EQUIPMENT OPERATION

- To protect a motor which has a nominal voltage lower than drive supply voltage, it is mandatory to use [Vector Control 2pt] (UC2) function in order to limit maximal voltage of the motor lower than network voltage.
- Nevertheless, it is necessary to check that instantaneous voltage applied to the motor (link to DC bus voltage) are compatible with characteristics of this one.

Failure to follow these instructions can result in equipment damage.

Graphic display terminal

Although the graphic display terminal is optional for low-power drives, it is a standard component on high-power drives (see catalog). The graphic display terminal can be disconnected and connected remotely (on the door of an enclosure for example) using the cables and accessories available as options (see catalog).

Description of the terminal

1 Graphic display

2 Function keys F1, F2, F3, F4, see page 15.

3 STOP/RESET button

4 RUN button

7 ESC key: Aborts a value, a parameter or a menu to return to the previous selection

6 Button for reversing the direction of rotation of the motor

5 Navigation button:

- Press (ENT): - To save the current value
  - To enter the selected menu or parameter
- Turn CW/ CCW: - To increment or decrement a value
  - To go to the next or previous line
  - To increase or decrease the reference if control via the terminal is activated

Note: Buttons **3**, **4**, **5** and **6** can be used to control the drive directly, if control via the terminal is activated.

Disconnected terminal

When the terminal is disconnected, two LEDs become visible:

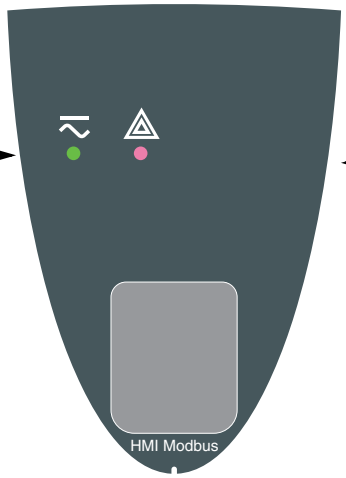

Green LED: DC bus ON

Red LED: Fault

Description of the graphic screen

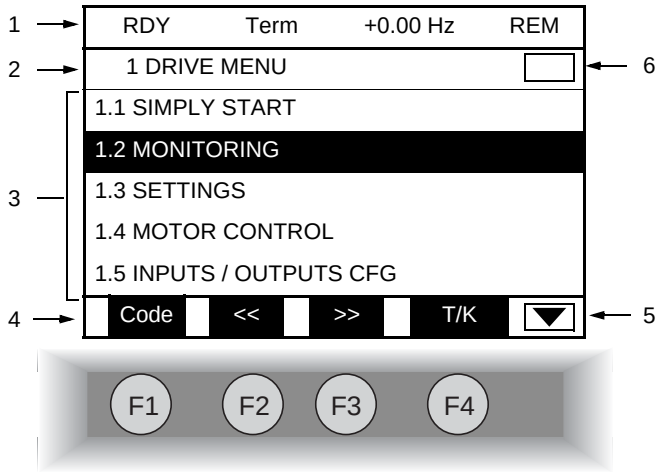

1. Display line. Its content can be configured; the factory settings show:
   - The drive state (see page 16)
   - The active control channel:
     - Term: Terminals
     - HMI: Graphic display terminal
     - MDB: Integrated Modbus
     - CAN: Integrated CANopen
     - NET: Communication card
     - APP: Controller Inside card
   - Frequency reference
   - LOC/REM: “LOC” appears if the command and reference are set via the graphic display terminal; otherwise, “REM” appears. This corresponds to the state selected by the [T/K] function key.

2. Menu line. Indicates the name of the current menu or submenu.

3. Menus, submenus, parameters, values, bar charts, etc., are displayed in drop-down window format on a maximum of 5 lines. The line or value selected by the navigation button is displayed in reverse video.

4. Section displaying the functions assigned to the keys F1 to F4 and aligned with them, for example:

   - Code F1 : Displays the code of the selected parameter, i.e., the code corresponding to the 7-segment display.
   - HELP F1 : Contextual help.
   - << F2 : Navigate horizontally to the left, or go to previous menu/submenu or, for a value, go to the next digit up, displayed in reverse video (see the example on page 17).
   - >> F3 : Navigate horizontally to the right or go to next menu/submenu (going to the [2 ACCESS LEVEL] menu in this example) or, for a value, go to the next digit down, displayed in reverse video (see the example on page 17).
   - T/K F4 : Command and reference via the terminal, see page 122.

The function keys are dynamic and contextual.
Other functions (application functions) can be assigned to these keys via the [1.6 COMMAND] menu.
If a preset speed is assigned to a function key and if the function key is pressed, the motor will run at this preset speed until another preset speed or JOG is pressed, speed reference is changed, or Stop key is pressed.

5. ☐ Indicates that there are no more levels below this display window.
   ▼ Indicates that there are more levels below this display window.

6. ☐ Indicates that there are no more levels above this display window.
   ▲ Indicates that there are more levels above this display window.

Drive state codes:

- ACC: Acceleration
- CLI: Current limit
- CTL: Controlled stop on input phase loss
- DCB: DC injection braking in progress
- DEC: Deceleration
- FLU: Motor fluxing in progress
- FRF: Drive at fallback speed
- FST: Fast stop
- NLP: No line power (no line supply on L1, L2, L3)
- NST: Freewheel stop
- OBR: Auto-adapted deceleration
- PRA: Power Removal function active (drive locked)
- RDY: Drive ready
- RUN: Drive running
- SOC: Controlled output cut in progress
- TUN: Auto-tuning in progress
- USA: Undervoltage alarm

Example configuration windows:

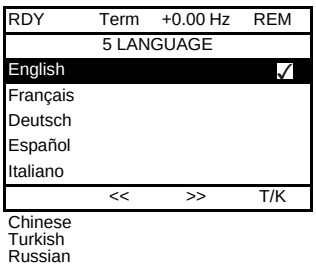

When only one possible selection can be made, the selection made is indicated by ✓
Example: Only one language can be chosen.

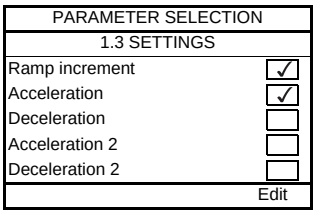

When multiple selection is possible, the selections made are indicated by ☑
Example: A number of parameters can be chosen to form the [USER MENU].

Example configuration window for one value:

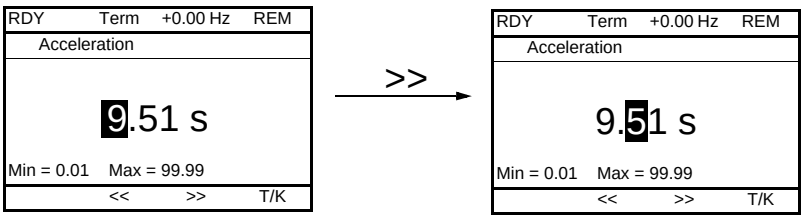

The << and >> arrows (keys F2 and F3) are used to select the digit to be modified, and the navigation button is rotated to increase or decrease this number.

First power-up – [5. LANGUAGE] menu

The first time the drive is powered up, the user will automatically be guided through the menus as far as [1. DRIVE MENU].
The parameters in the [1.1 SIMPLY START] submenu must be configured and auto-tuning performed before the motor is started up.

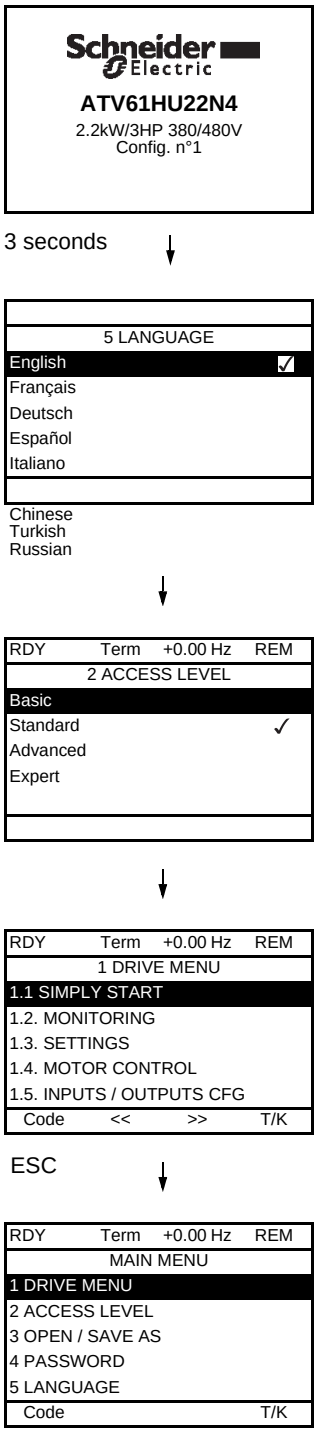

Display for 3 seconds following power-up

Switches to [5 LANGUAGE] menu automatically.

Select the language and press ENT.

Switches to [2 ACCESS LEVEL] menu
(see page 27)
Select the access level and press ENT.

Switches to [1 DRIVE MENU]
(see page 23)

Press ESC to return to [MAIN MENU]

Subsequent power ups

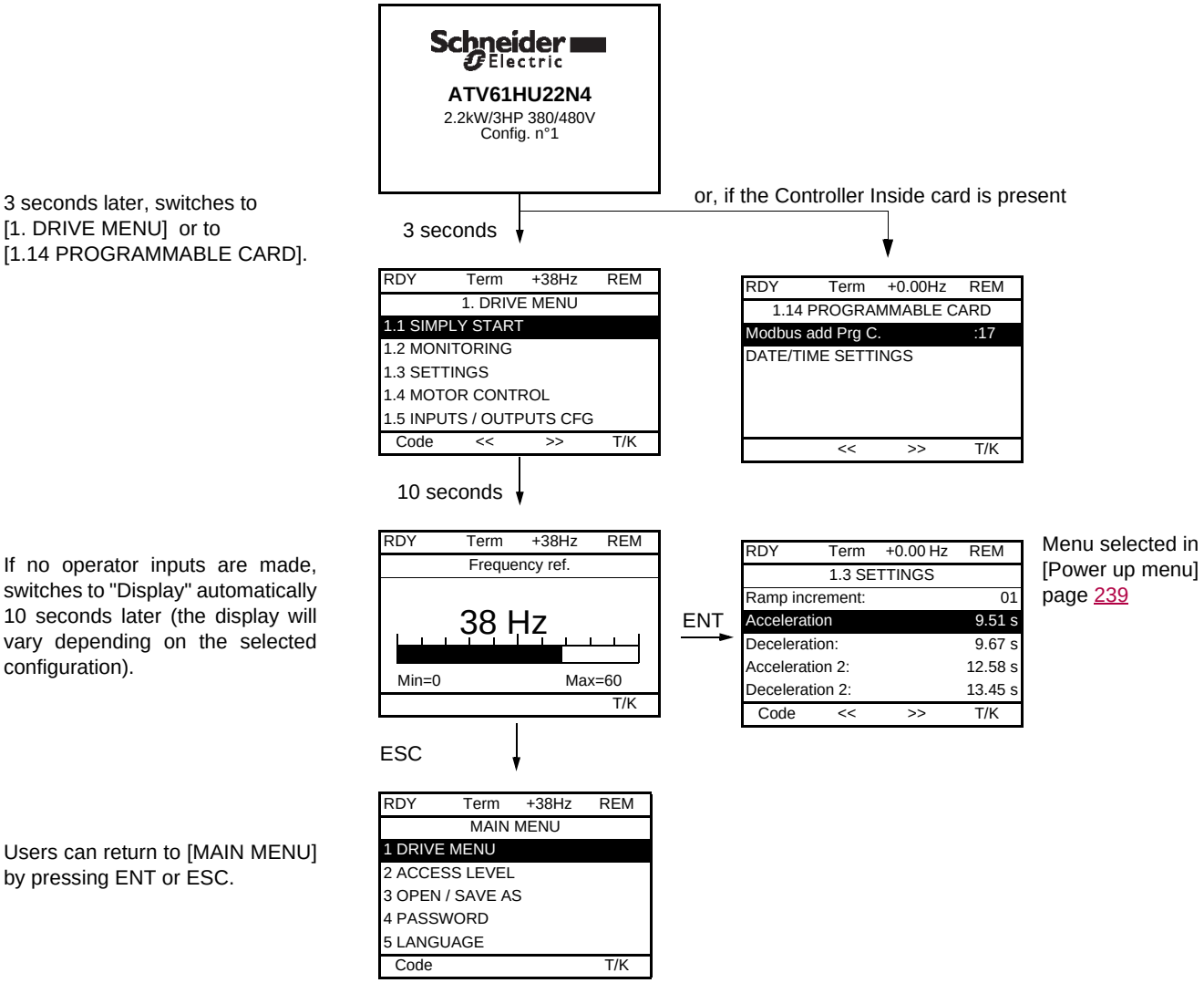

Programming: Example of accessing a parameter

Accessing the acceleration ramp

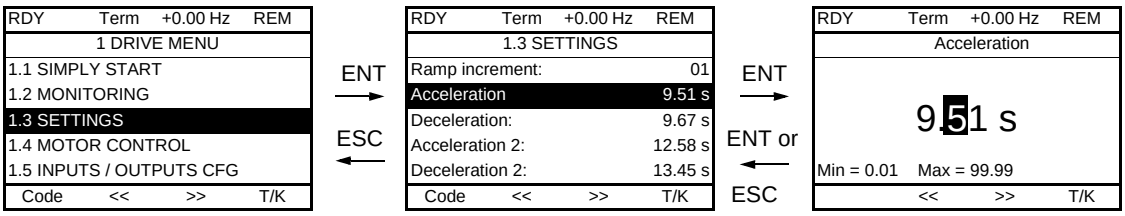

Note:

- To select a parameter:
  - Turn the navigation button to scroll vertically.
- To modify a parameter:
  - Use the << and >> keys (F2 and F3) to scroll horizontally and select the digit to be modified (the selected digit changes to white on a black background).
  - Turn the navigation button to modify the digit.
- To cancel the modification:
  - Press ESC.
- To save the modification:
  - Press the navigation button (ENT).

Quick navigation

In order to access this function you must first reassign the F4 key, which is assigned by default to control via the terminal (T/K) (see page 122). If the “Quick” function is displayed above the F4 key, you can gain quick access to a parameter from any screen.

Example:

```
RDY        Term    +0.00 Hz    REM
     1.4 MOTOR CONTROL
Standard mot. freq:          5 0 Hz IEC
Rated motor power:   0.37 kW (0.5 HP)
Rated motor volt.:                206 V
Rated mot. current:               1.0 A
Rated motor freq.:               50.0 Hz
 Code        <<        >>        Quick
```

Press F4 to access the Quick screen, which contains 4 selection options.

```
RDY        Term    +0.00 Hz    REM
     QUICK NAVIGATION
RETURN TO MAIN MENU
DIRECT ACCESS TO...
10 LAST MODIFICATIONS
GOTO MULTIPOINT SCREEN

 Code
```

ENT →

```
RDY        Term    +0.00 Hz    REM
     MAIN MENU
1 DRIVE MENU
2 ACCESS LEVEL
3 OPEN / SAVE AS
4 PASSWORD
5 LANGUAGE
 Code                          Quick
```

- [HOME]: Return to [MAIN MENU].

See page 240

- [DIRECT ACCESS TO...]: Opens the direct access window, which will contain the text “1”. The function keys << and >> (F2 and F3) can be used to select each of the numbers and the navigation button to increment or decrement the numbers: 1.3 in the example below.

```
RDY        Term    +0.00 Hz    REM
     DIRECT ACCESS TO...

          1.3

       SETTINGS

        <<        >>
```

ENT →

```
RDY        Term    +0.00 Hz    REM
     1.3 SETTINGS
Ramp increment:                  01
Acceleration                   9.51 s
Deceleration:                  9.67 s
Acceleration 2:               12.58 s
Deceleration 2:               13.45 s
 Code        <<        >>        Quick
```

- [10 LAST MODIFICATIONS]: Opens a window in which the last 10 parameters modified can be accessed directly.

```
RDY        Term    +0.00 Hz    REM
     10 LAST MODIFICATIONS
Acceleration:                  10 s
Speed prop. gain:               25%
Rated mot. current:             15 A
Preset speed 4:          20 Hz
Preset speed 5:          30 Hz
 Code
```

ENT →
← ESC

```
RDY        Term    +0.00 Hz    REM
     Rated mot. current

          15.0 A

        <<        >>
```

[MAIN MENU] – Menu mapping

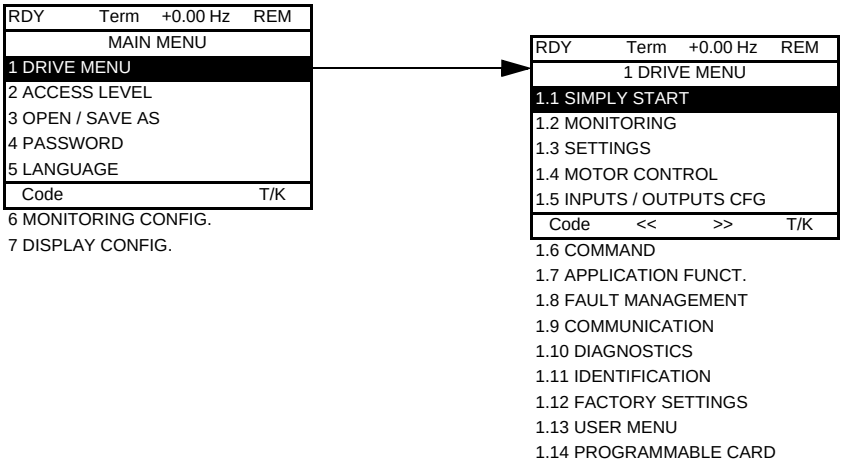

Content of [MAIN MENU] menus

[1 DRIVE MENU]	See next page
[2 ACCESS LEVEL]	Defines which menus can be accessed (level of complexity)
[3 OPEN / SAVE AS]	Can be used to save and recover drive configuration files
[4 PASSWORD]	Provides password protection for the configuration
[5 LANGUAGE]	Language selection
[6 MONITORING CONFIG.]	Customization of information displayed on the graphic display terminal during operation
[7 DISPLAY CONFIG.]	• Customization of parameters • Creation of a customized user menu • Customization of the visibility and protection mechanisms for menus and parameters

[1 DRIVE MENU]

```
RDY        Term    +0.00 Hz    REM
            1 DRIVE MENU
1.1 SIMPLY START
1.2 MONITORING
1.3 SETTINGS
1.4 MOTOR CONTROL
1.5 INPUTS / OUTPUTS CFG
 Code       <<         >>        T/K
1.6 COMMAND
1.7 APPLICATION FUNCT.
1.8 FAULT MANAGEMENT
1.9 COMMUNICATION
1.10 DIAGNOSTICS
1.11 IDENTIFICATION
1.12 FACTORY SETTINGS
1.13 USER MENU
1.14 PROGRAMMABLE CARD
```

Content of [1. DRIVE MENU] menus:

[1.1 SIMPLY START]:	Simplified menu for fast startup
[1.2 MONITORING]:	Visualization of current, motor and input/output values
[1.3 SETTINGS]:	Accesses the adjustment parameters, which can be modified during operation
[1.4 MOTOR CONTROL]:	Motor parameters (motor nameplate, auto-tuning, switching frequency, control algorithms, etc.)
[1.5 INPUTS / OUTPUTS CFG]:	I/O configuration (scaling, filtering, 2-wire control, 3-wire control, etc.)
[1.6 COMMAND]:	Configuration of command and reference channels (graphic display terminal, terminals, bus, etc.)
[1.7 APPLICATION FUNCT.]:	Configuration of application functions (e.g., preset speeds, PID, etc.)
[1.8 FAULT MANAGEMENT]:	Configuration of fault management
[1.9 COMMUNICATION]:	Communication parameters (fieldbus)
[1.10 DIAGNOSTICS]:	Motor/drive diagnostics
[1.11 IDENTIFICATION]:	Identification of the drive and internal options
[1.12 FACTORY SETTINGS]:	Access to configuration files and return to factory settings
[1.13 USER MENU]:	Specific menu set up by the user in the [7. DISPLAY CONFIG.] menu
[1.14 CONTROL. INSIDE CARD]:	Configuration of optional Controller Inside card

Low-power Altivar 61 drives (see catalog) feature an integrated display terminal with a 7-segment 4-digit display. The graphic display terminal described on the previous pages can also be connected to these drives as an option.

Functions of the display and the keys

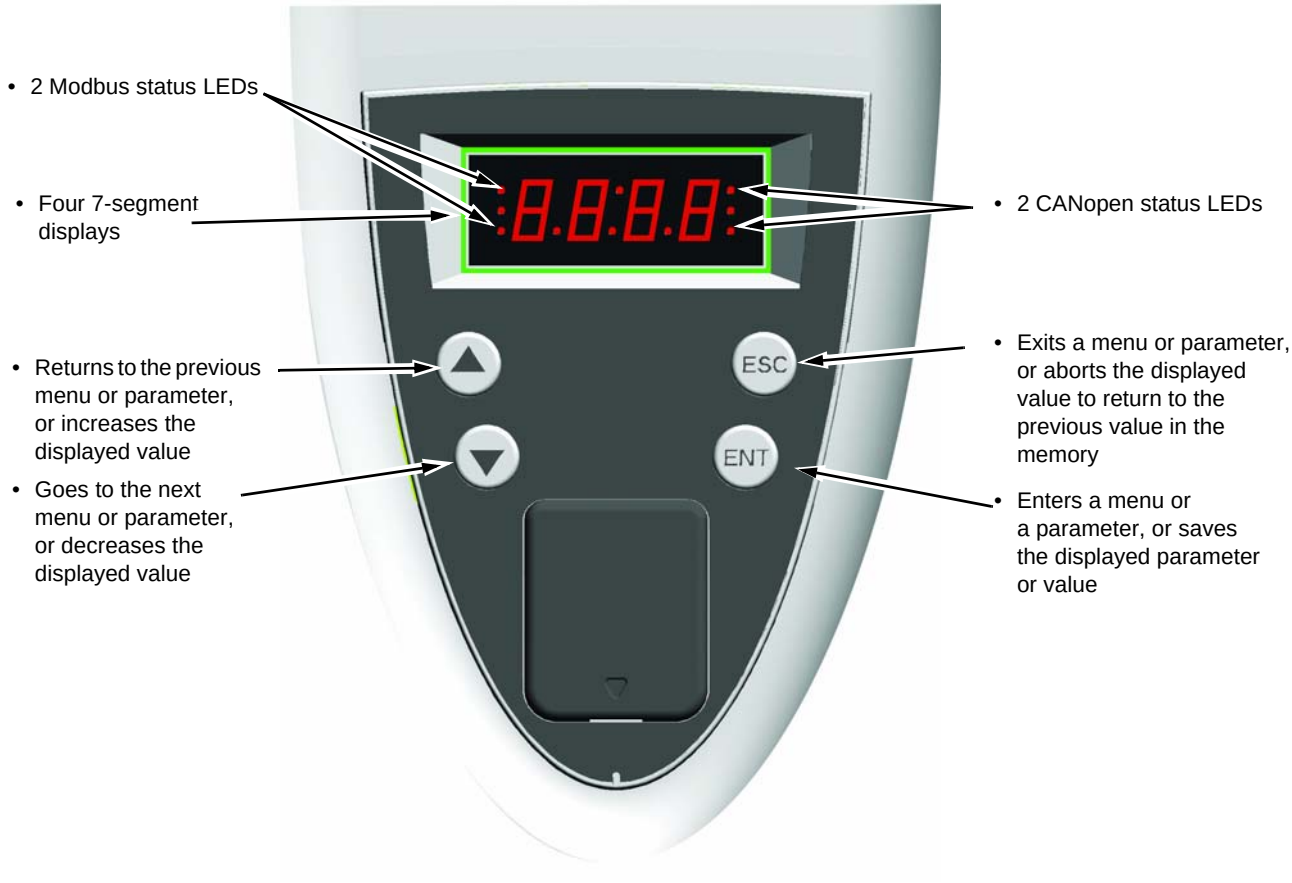

Note: • **Pressing ▲ or ▼ does not store the selection.**

• **Press and hold down (>2 s) ▲ or ▼ to scroll through the data quickly.**

Save and store the selection: ENT

The display flashes when a value is stored.

Normal display, with no fault present and no startup:

- 43.0: Display of the parameter selected in the SUP menu (default selection: motor frequency)
- CLI: Current limit
- CtL: Controlled stop on input phase loss
- dCb: DC injection braking in progress
- FLU: Motor fluxing in progress
- FRF: Drive at fallback speed
- FSt: Fast stop
- nLP: No line power (no line supply on L1, L2, L3)
- nSt: Freewheel stop
- Obr: Auto-adapted deceleration
- PrA: Power Removal function active (drive locked)
- rdY: Drive ready
- SOC: Controlled output cut in progress
- tUn: Auto-tuning in progress
- USA: Undervoltage alarm

The display flashes to indicate the presence of a fault.

Accessing menus

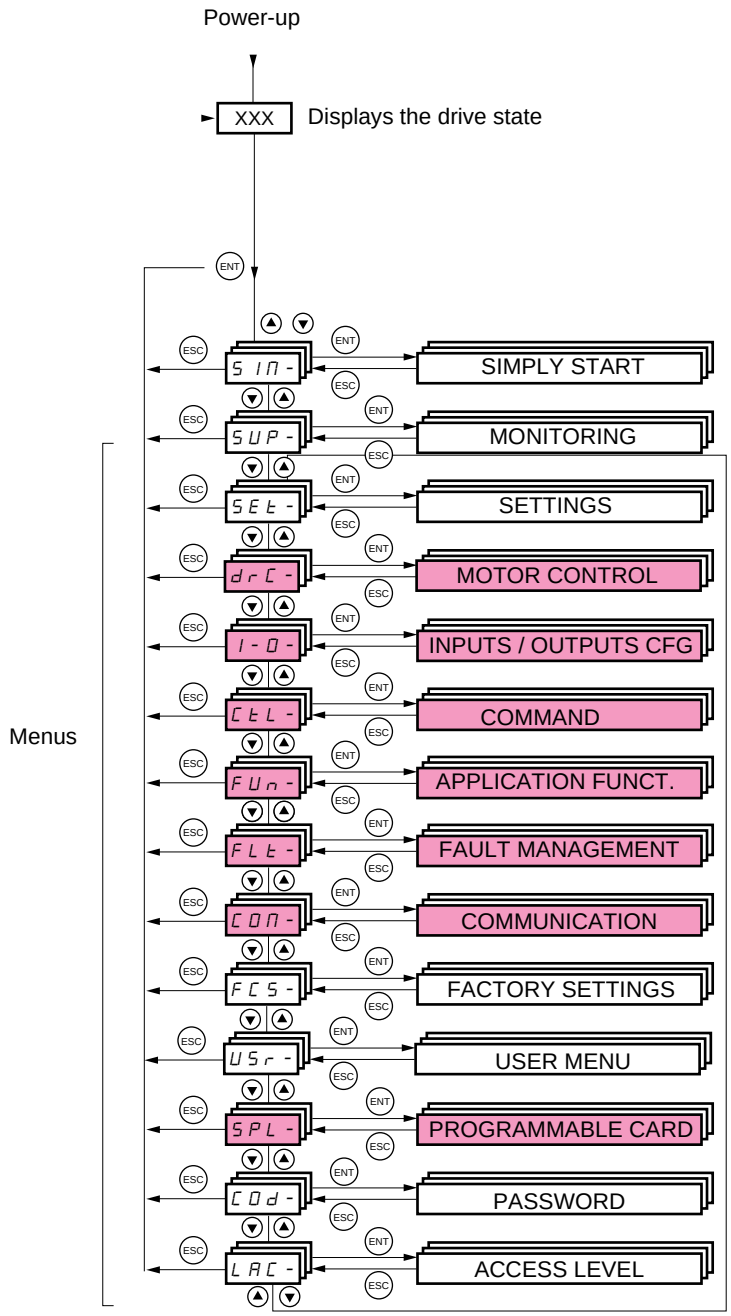

(page 33) Simplified menu for fast startup

(page 39) Visualization of current, motor and input/output values

(page 48) Adjustment parameters, can be modified during operation

(page 67) Motor parameters (motor nameplate, auto-tuning, switching frequency, control algorithms, etc.)

(page 81) I/O configuration (scaling, filtering, 2-wire control, 3-wire control, etc.)

(page 110) Configuration of command and reference channels (graphic display terminal, terminals, bus, etc.)

(page 123) Configuration of application functions (e.g., preset speeds, PID, etc.)

(page 189) Configuration of fault management

(page 215) Communication parameters (fieldbus)

(page 222) Access to configuration files and return to factory settings

(page 225) Specific menu, set up by the user using the graphic display terminal.

(page 226) Menu for the Controller Inside card, if present.

(page 229)

(page 27)

A dash appears after menu and submenu codes to differentiate them from parameter codes.
Examples: FUn- menu, ACC parameter.

The grayed-out menus may not be accessible depending on the control access (LAC) configuration.

Accessing menu parameters

Save and store the displayed selection: ENT

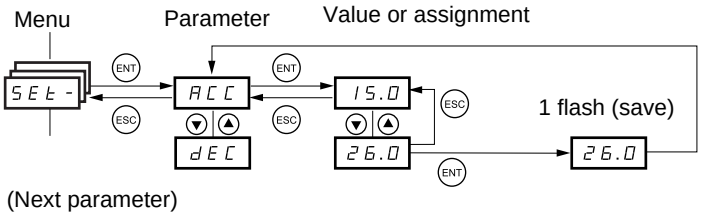

The display flashes when a value is stored.

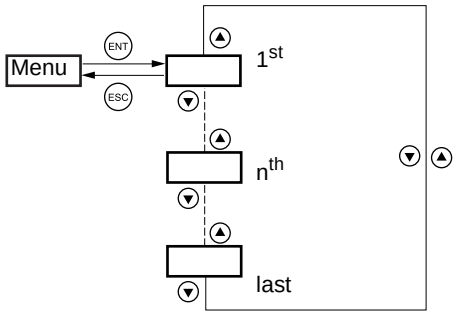

All the menus are “drop-down scrolling” menus, which means that after the last parameter, if you continue to press ▼, you will return to the first parameter and, conversely, you can switch from the first parameter to the last parameter by pressing ▲.

Selection of multiple assignments for one parameter

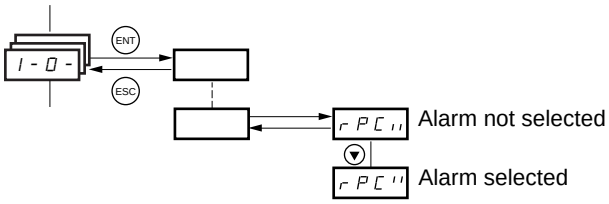

Example: List of group 1 alarms in [INPUTS / OUTPUTS CFG] menu (I-O-)
A number of alarms can be selected by “checking” them as follows.

The digit on the right indicates: selected

not selected

The same principle is used for all multiple selections.

With graphic display terminal

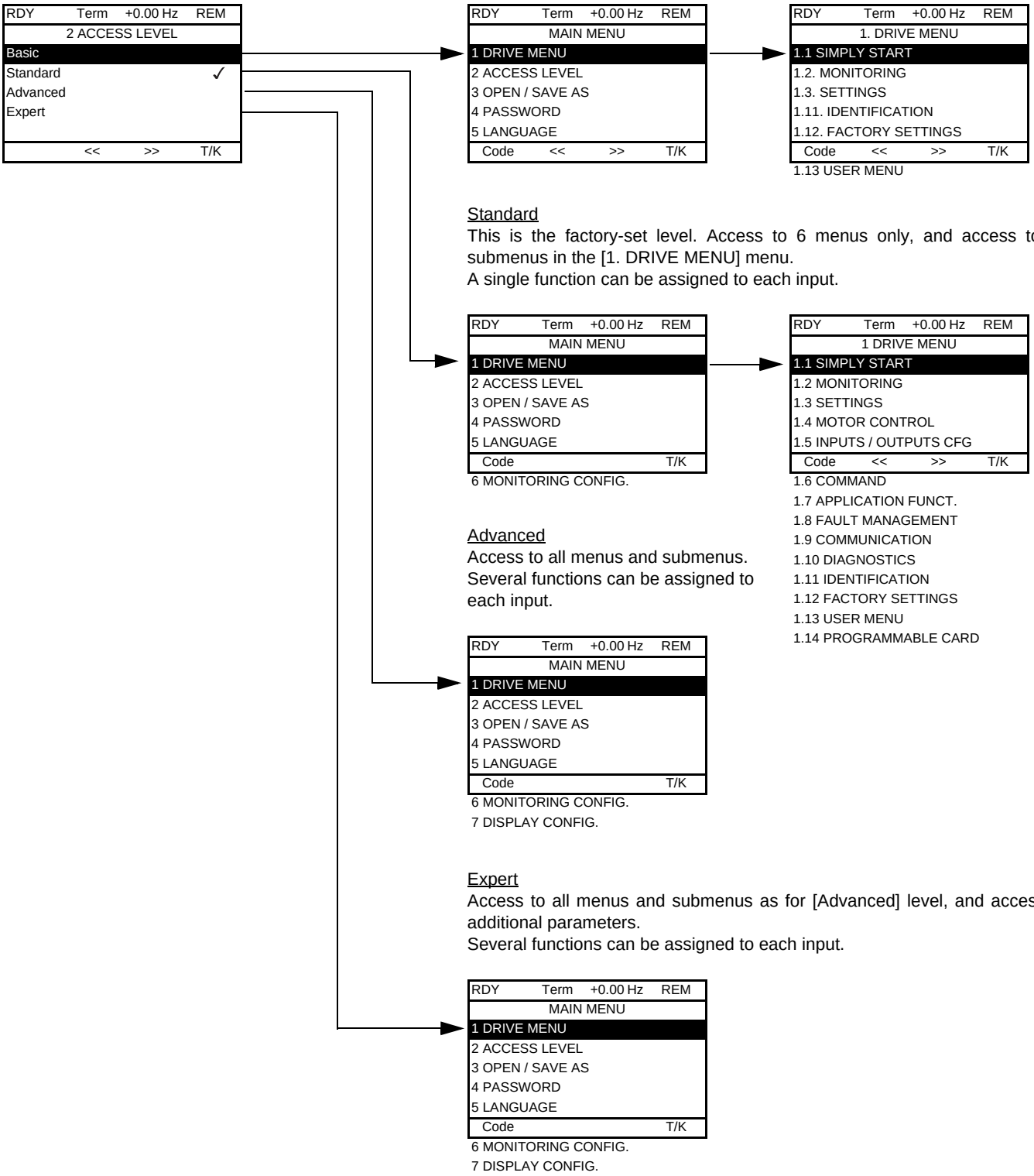

With integrated display terminal:

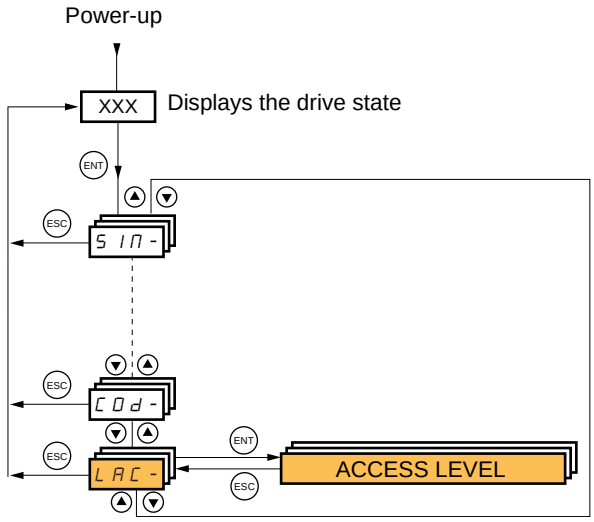

Code	Name/Description	Factory setting
LAC-		Std
bAS	• bAS: Limited access to SIM, SUP, SEt, FCS, USr, COd and LAC menus. A single function can be assigned to each input.	
Std	• Std: Access to all menus on the integrated display terminal. A single function can be assigned to each input.	
AdU	• AdU: Access to all menus on the integrated display terminal. Several functions can be assigned to each input.	
EPr	• EPr: Access to all menus on the integrated display terminal and access to additional parameters. Several functions can be assigned to each input.	

Comparison of the menus that can be accessed on the graphic display terminal/ integrated display terminal

Graphic display terminal		Integrated display terminal	Access level
[2 ACCESS LEVEL]		LAC - (Access level)	Basic bAS
[3. OPEN / SAVE AS]		-	
[4 PASSWORD]		COd - (Password)	
[5 LANGUAGE]		-	
[1 DRIVE MENU]	[1.1 SIMPLY START]	SIM - (Simply start)	
	[1.2 MONITORING]	SUP - (Monitoring)	
	[1.3 SETTINGS]	SEt - (Settings)	
	[1.11 IDENTIFICATION]	-	
	[1.12 FACTORY SETTINGS]	FCS - (Factory settings)	
	[1.13 USER MENU]	USr - (User menu)	
A single function can be assigned to each input.		A single function can be assigned to each input.	
	[1.4 MOTOR CONTROL]	drC - (Motor control)	Standard Std (factory setting)
	[1.5 INPUTS / OUTPUTS CFG]	I-O - (I/O configuration)	
	[1.6 COMMAND]	CtL - (Command)	
	[1.7 APPLICATION FUNCT.]	FUn - (Application functions)	
	[1.8 FAULT MANAGEMENT]	FLt - (Fault management)	
	[1.9 COMMUNICATION]	COM - (Communication)	
	[1.10 DIAGNOSTICS]	-	
	[1.14 PROGRAMMABLE CARD] (1)	PLC - (Controller Inside card) (1)	
[6 MONITORING CONFIG.]		-	
A single function can be assigned to each input.		A single function can be assigned to each input.	
[7 DISPLAY CONFIG.]		-	Advanced Adv
Several functions can be assigned to each input.		Several functions can be assigned to each input.	
Expert parameters		Expert parameters	Expert EPr
Several functions can be assigned to each input.		Several functions can be assigned to each input.	

(1) Can be accessed if the Controller Inside card is present.

Structure of parameter tables

The parameter tables in the descriptions of the various menus can be used with both the graphic display terminal and the integrated display terminal. They, therefore, contain information for these two terminals in accordance with the description below.

Example:

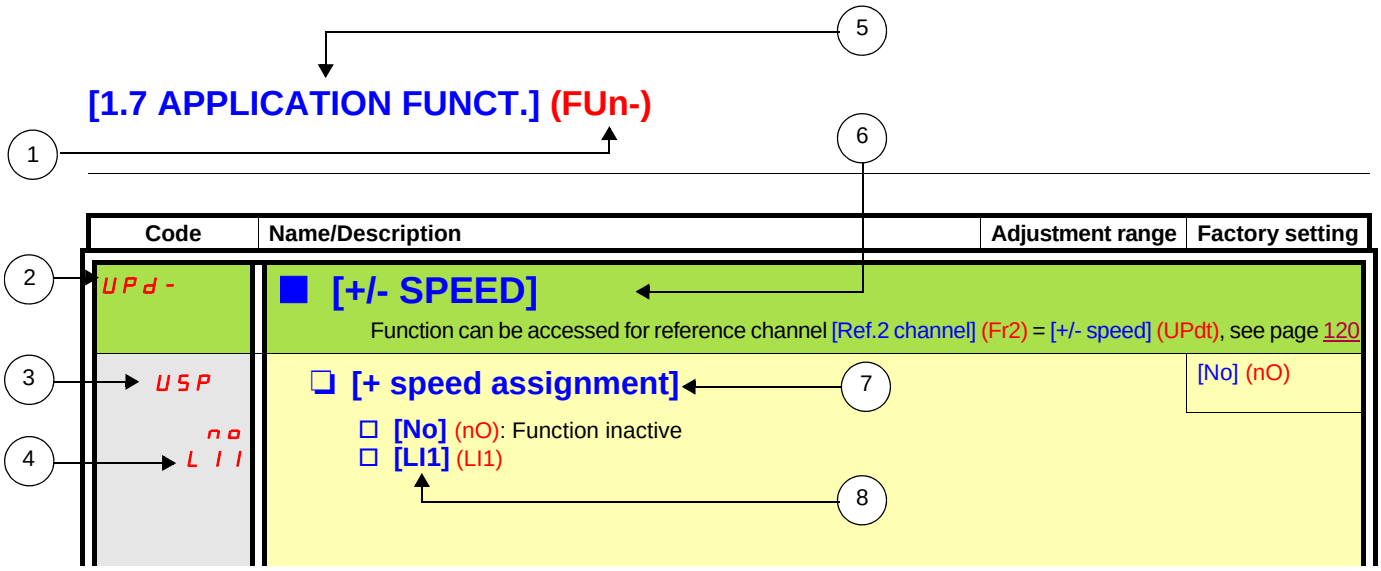

1. Name of menu on 4-digit 7-segment display
2. Submenu code on 4-digit 7-segment display
3. Parameter code on 4-digit 7-segment display
4. Parameter value on 4-digit 7-segment display
5. Name of menu on graphic display terminal
6. Name of submenu on graphic display terminal
7. Name of parameter on graphic display terminal
8. Value of parameter on graphic display terminal

Note:
- The text in square brackets [ ] indicates what you will see on the graphic display terminal.
- The factory settings correspond to [Macro configuration] (CFG) = [Pumps.Fans] (PnF). This is the macro configuration set at the factory.

Interdependence of parameter values

The configuration of certain parameters modifies the adjustment range of other parameters, in order to reduce the risk of errors. **This may result in the modification of a factory setting or a value you have already selected.**

Example 1:

1. [Switching freq.] (SFr) page 77 set to 16 kHz.
2. [Sinus filter] (OFI), see page 77, set to [Yes] (YES) (and confirmed with “ENT”) limits [Switching freq.] (SFr) to 8 kHz.

If you set [Sinus filter] (OFI) to [No] (nO), [Switching freq.] (SFr) will no longer be limited **but will remain at 8 kHz**. If you require 16 kHz, you must **reset** [Switching freq.] (SFr).

Example 2:

1. The factory setting of [Switching freq.] (SFr) page 77 remains unchanged at 2.5 kHz.
2. Setting [Sinus filter] (OFI) page 77 to [Yes] (YES) (and confirming with “ENT”) changes the factory setting of [Switching freq.] (SFr) to 4 kHz.
3. If you set [Sinus filter] (OFI) to [No] (nO), [Switching freq.] (SFr) **will remain at 4 kHz**. If you require 2.5 kHz, you must **reset** [Switching freq.] (SFr).

Finding a parameter in this document

The following assistance with finding explanations on a parameter is provided:

- **With the integrated display terminal:** Direct use of the parameter code index, page 251, to find the page giving details of the displayed parameter.
- **With the graphic display terminal:** Select the required parameter and press F1 : [Code]. The parameter code is displayed instead of its name while the key is held down.

  Example: ACC

RDY	Term	+0.00 Hz	REM
1.3 SETTINGS			
Ramp increment:			01
Acceleration			9.51 s
Deceleration:			9.67 s
Acceleration 2:			12.58 s
Deceleration 2:			13.45 s
Code	<<	>>	T/K

Code →

RDY	Term	+0.00 Hz	REM
1.3 SETTINGS			
Ramp increment:			01
ACC			9.51 s
Deceleration:			9.67 s
Acceleration 2:			12.58 s
Deceleration 2:			13.45 s
Code	<<	>>	T/K

Then use the parameter code index, page 251, to find the page giving details of the displayed parameter.

With graphic display terminal:

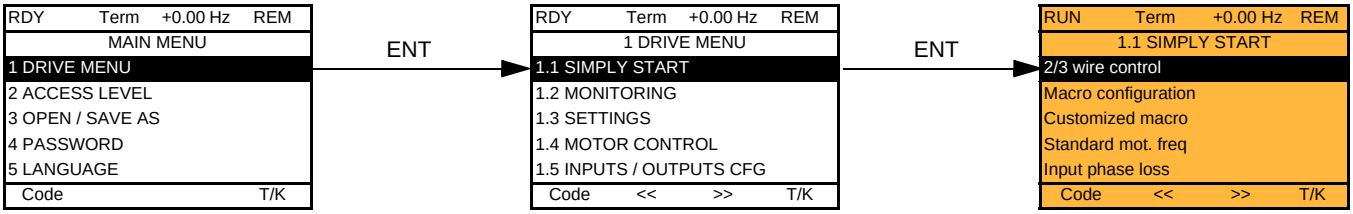

With integrated display terminal:

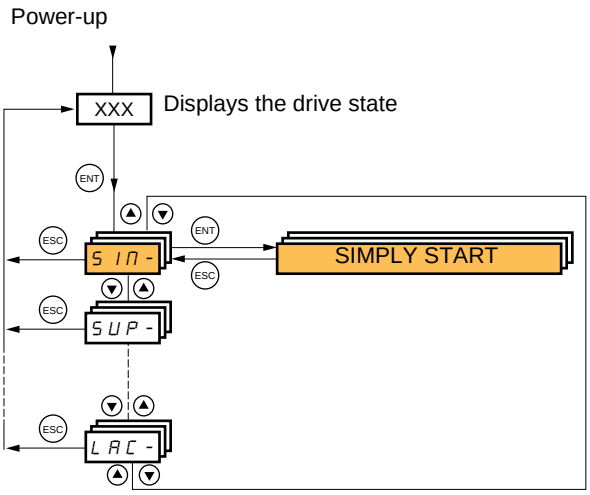

The [1.1-SIMPLY START] (SIM-) menu can be used for fast startup, which is sufficient for the majority of applications.

The parameters in this menu can only be modified when the drive is stopped and no run command is present, with the following exceptions:
- Auto-tuning, which causes the motor to start up
- The adjustment parameters on page 38

Note: The parameters of the [1.1 SIMPLY START] (SIM-) menu must be entered in the order in which they appear, as the later ones are dependent on the first ones.
For example [2/3 wire control] (tCC) must be configured before any other parameters.

The [1.1 SIMPLY START] (SIM-) menu should be configured **on its own or before the other drive configuration menus**. If a modification has previously been made to any of them, in particular in [1.4 MOTOR CONTROL] (drC-), some [1.1 SIMPLY START] (SIM-) parameters may be changed, for example, the motor parameters, if a synchronous motor has been selected. Returning to the [1.1 SIMPLY START] (SIM-) menu after modifying another drive configuration menu **is unnecessary** but does not pose any risk. Changes following modification of another configuration menu **are not described**, to avoid unnecessary complication in this section.

Macro configuration

Macro configuration provides a means of speeding up the configuration of functions for a specific field of application.
5 macro configurations are available:

- Start/stop
- General use
- PID regulator
- Communication bus
- Pumps/fans (factory configuration)

Selecting a macro configuration assigns the parameters in this macro configuration.

Each macro configuration can still be modified in the other menus.

Macro configuration parameters

Assignment of the inputs/outputs

Input/ output	[Start/Stop]	[Gen. Use]	[PID regul.]	[Network C.]	[Pumps.Fans]
AI1	[Ref.1 channel]	[Ref.1 channel]	[Ref.1 channel] (PID reference)	[Ref.2 channel] ([Ref.1 channel] = integrated Modbus) (1)	[Ref.1 channel]
AI2	[No]	[Summing ref. 2]	[PID feedback]	[No]	[Ref.1B channel]
AO1	[No]	[No]	[No]	[No]	[No]
R1	[No drive flt]	[No drive flt]	[No drive flt]	[No drive flt]	[No drive flt]
R2	[No]	[No]	[No]	[No]	[Drv running]
LI1 (2-wire)	[Forward]	[Forward]	[Forward]	[Forward]	[Forward]
LI2 (2-wire)	[Fault reset]	[Reverse]	[Fault reset]	[Fault reset]	[No]
LI3 (2-wire)	[No]	[Jog]	[PID integral reset]	[Ref. 2 switching]	[Ref 1B switching]
LI4 (2-wire)	[No]	[Fault reset]	[2 preset PID ref.]	[Forced local]	[Fault reset]
LI5 (2-wire)	[No]	[Torque limitation]	[4 preset PID ref.]	[No]	[No]
LI6 (2-wire)	[No]	[No]	[No]	[No]	[No]
LI1 (3-wire)	Stop	Stop	Stop	Stop	Stop
LI2 (3-wire)	[Forward]	[Forward]	[Forward]	[Forward]	[Forward]
LI3 (3-wire)	[Fault reset]	[Reverse]	[Fault reset]	[Fault reset]	[No]
LI4 (3-wire)	[No]	[Jog]	[PID integral reset]	[Ref. 2 switching]	[Ref 1B switching]
LI5 (3-wire)	[No]	[Fault reset]	[2 preset PID ref.]	[Forced local]	[Fault reset]
LI6 (3-wire)	[No]	[Torque limitation]	[4 preset PID ref.]	[No]	[No]
Option cards					
LI7 to LI14	[No]	[No]	[No]	[No]	[No]
LO1 to LO4	[No]	[No]	[No]	[No]	[No]
R3/R4	[No]	[No]	[No]	[No]	[No]
AI3, AI4	[No]	[No]	[No]	[No]	[No]
RP	[No]	[No]	[No]	[No]	[No]
AO2	[I motor]	[I motor]	[I motor]	[I motor]	[I motor]
AO3	[No]	[No]	[PID Output]	[No]	[No]
Graphic display terminal keys					
F1 key	[No]	[No]	[No]	[No]	[No]
F2, F3 keys	[No]	[No]	[No]	[No]	[No]
F4 key	[T/K] (Control via graphic display terminal)	[T/K] (Control via graphic display terminal)	[T/K] (Control via graphic display terminal)	[T/K] (Control via graphic display terminal)	[T/K] (Control via graphic display terminal)

In 3-wire control, the assignment of inputs LI1 to LI7 shifts.

(1) To start up with integrated Modbus, [Modbus Address] (Add) must first be configured, page 217.

Note: These assignments are reinitialized every time the macro configuration changes.

Return to factory settings:
Returning to factory settings with [Config. source] (FCSI) = [Macro-Conf] (Inl) page 224 will restore the selected macro configuration. The [Macro configuration] (CFG) parameter does not change, although [Customized macro] (CCFG) disappears.

Note:
- The factory settings in the parameter tables correspond to [Macro configuration] (CFG) = [Pumps.Fans] (PnF). This is the macro configuration set at the factory.

Code	Name/Description	Adjustment range	Factory setting
tCC	❑ **[2/3 wire control]**		[2 wire] (2C)
2C	☐ **[2 wire]** (2C)		
3C	☐ **[3 wire]** (3C)		

2-wire control: This is the input state (0 or 1) or edge (0 to 1 or 1 to 0), which controls running or stopping.

Example of “source” wiring:

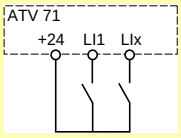

LI1: forward
LIx: reverse

3-wire control (pulse control): A “forward” or “reverse” pulse is sufficient to command starting, a “stop” pulse is sufficient to command stopping.

Example of “source” wiring:

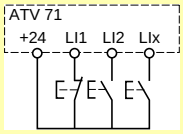

LI1: stop
LI2: forward
LIx: reverse

WARNING

UNINTENDED EQUIPMENT OPERATION

To change the assignment of [2/3 wire control] (tCC) press the “ENT” key for 2 s.
The following function will be returned to factory settings: [2 wire type] (tCt) page 82 as will all functions which assign logic inputs.
The macro configuration selected will also be reset if it has been customized (loss of custom settings).
Check that this change is compatible with the wiring diagram used.
Failure to follow these instructions can result in death or serious injury.

CFG	❑ **[Macro configuration]**		[Pumps.Fans] (PnF)
StS	☐ **[Start/Stop]** (StS): Start/stop		
GEn	☐ **[Gen. Use]** (GEn): General use		
PId	☐ **[PID regul.]** (PId): PID regulation		
nEt	☐ **[Network C.]** (nEt): Communication bus		
PnF	☐ **[Pumps.Fans]** (PnF): Pumps/fans		

WARNING

UNINTENDED EQUIPMENT OPERATION

To change the assignment of [Macro configuration] (CFG) press the “ENT” key for 2 s.
Check that the selected macro configuration is compatible with the wiring diagram used.
Failure to follow these instructions can result in death or serious injury.

CCFG	❑ **[Customized macro]**		
	Read-only parameter, only visible if at least one macro configuration parameter has been modified.		
YES	☐ **[Yes]** (YES)		

Code	Name/Description	Adjustment range	Factory setting
bFr 50 60	❑ **[Standard mot. freq]** ☐ **[50Hz IEC]** (50): IEC. ☐ **[60Hz NEMA]** (60): NEMA. This parameter modifies the presets of the following parameters: [Rated motor power] (nPr), [Rated motor volt.] (UnS), [Rated drive current] (nCr), [Rated motor freq.] (FrS), [Rated motor speed] (nSP), and [Max frequency] (tFr) below, [Mot. therm. current] (ItH) page 38, [High speed] (HSP) page 38.		[50Hz IEC] (50)
IPL nO YES	❑ **[Input phase loss]** ☐ **[Ignore]** (nO): Fault ignored, to be used when the drive is supplied via a single-phase supply or by the DC bus. ☐ **[Freewheel]** (YES): Fault, with freewheel stop. If one phase disappears, the drive switches to fault mode [Input phase loss] (IPL) but if 2 or 3 phases disappear, the drive continues to operate until it trips on an undervoltage fault. This parameter is only accessible in this menu on ATV61H037M3 to HU75M3 drives (used with a single phase supply).		According to drive rating
nPr	❑ **[Rated motor power]** Rated motor power given on the nameplate, in kW if [Standard mot. freq] (bFr) = [50 Hz IEC] (50), in HP if [Standard mot. freq] (bFr) = [60 Hz NEMA] (60).	According to drive rating	According to drive rating
UnS	❑ **[Rated motor volt.]** Rated motor voltage given on the nameplate. ATV61●●●M3: 100 to 240 V - ATV61●●●N4: 200 to 480 V - ATV61●●●S6X: 400 to 600 V - ATV61●●●Y: 400 to 690 V.	According to drive rating	According to drive rating and [Standard mot. freq] (bFr)
nCr	❑ **[Rated mot. current]** Rated motor current given on the nameplate.	0.25 to 1.1 or 1.2 Hz according to rating (1)	According to drive rating and [Standard mot. freq] (bFr)
FrS	❑ **[Rated motor freq.]** Rated motor frequency given on the nameplate. The factory setting is 50 Hz, or preset to 60 Hz if [Standard mot. freq] (bFr) is set to 60 Hz.	10 to 500 or 599 Hz according to rating	50 Hz
nSP	❑ **[Rated motor speed]** Rated motor speed given on the nameplate. 0 to 9,999 rpm then 10.00 to 60.00 krpm on the integrated display terminal. If, rather than the rated speed, the nameplate indicates the synchronous speed and the slip in Hz or as a %, calculate the rated speed as follows: • Nominal speed = Synchronous speed x $\frac{100 - \text{slip as a \%}}{100}$ or • Nominal speed = Synchronous speed x $\frac{50 - \text{slip in Hz}}{50}$ (50 Hz motors) or • Nominal speed = Synchronous speed x $\frac{60 - \text{slip in Hz}}{60}$ (60 Hz motors)	0 to 60,000 rpm	According to drive rating
tFr	❑ **[Max frequency]** The factory setting is 60 Hz, or preset to 72 Hz if [Standard mot. freq] (bFr) is set to 60 Hz. The maximum value is limited by the following conditions: • It must not exceed 10 times the value of [Rated motor freq.] (FrS) • Values between 500 Hz and 599 Hz are not possible for ATV61H●●●Y (500 to 690 V) • Values between 500 Hz and 599 Hz are only possible in V/F control and for powers limited to 37 kW (50 HP) for ATV61H ●●● and 45 kW (60 HP) for ATV61W●●●. In this case, configure [Motor control type] (Ctt) before [Max frequency] (tFr).	10 to 500 or 599 Hz according to rating	60 Hz

(1) In corresponds to the rated drive current indicated in the Installation Manual and on the drive nameplate.

Code	Name/Description	Factory setting
tUn	❑ **[Auto tuning]**	[No] (nO)

⚠⚠ DANGER

HAZARD OF ELECTRIC SHOCK OR ARC FLASH

- During auto-tuning, the motor operates at rated current.
- Do not service the motor during auto-tuning.

Failure to follow these instructions will result in death or serious injury.

⚠ WARNING

LOSS OF CONTROL

- It is essential that the following parameters [Rated motor volt.] (UnS), [Rated motor freq.] (FrS), [Rated mot. current] (nCr), [Rated motor speed] (nSP) and [Rated motor power] (nPr) are correctly configured before starting auto-tuning for asynchronous motor.
- It is essential that the following parameters [Nominal I sync] (nCrS), [Nom motor spdsync] (nSPS), [Pole pairs.] (PPnS), [Syn. EMF constant] (PHS), [Autotune L d-axis] (LdS) and [Autotune L q-axis] (LqS) are correctly configured before starting auto-tuning for synchronous motor.
- When one or more of these parameters have been changed after auto-tuning has been performed, [Auto tuning] (tUn) will return [No] (nO) and the procedure will have to be repeated.

Failure to follow these instructions can result in death or serious injury.

nO ☐ **[No]** (nO): Auto-tuning not performed.

YES ☐ **[Yes]** (YES): Auto-tuning is performed as soon as possible, then the parameter automatically changes to [Done] (dOnE).

dOnE ☐ **[Done]** (dOnE): Use of the values given the last time auto-tuning was performed.

Note:

- Auto-tuning is only performed if no stop command has been activated. If a "freewheel stop" or "fast stop" function has been assigned to a logic input, this input must be set to 1 (active at 0).
- Auto-tuning takes priority over any run or prefluxing commands, which will be taken into account after the auto-tuning sequence.
- If auto-tuning fails, the drive displays [No] (nO) and, depending on the configuration of [Autotune fault mgt] (tnL) page 208, may switch to [Auto-tuning] (tnF) fault mode.
- Auto-tuning may last for 1 to 2 seconds. Do not interrupt the process. Wait for the display to change to "[Done] (dOnE)" or "[No] (nO)".

tUS	❑ **[Auto tuning status]**	[Not done] (tAb)

(for information only, cannot be modified)

tAb ☐ **[Not done]** (tAb): The default stator resistance value is used to control the motor.

PEnd ☐ **[Pending]** (PEnd): Auto-tuning has been requested but not yet performed.

PrOG ☐ **[In Progress]** (PrOG): Auto-tuning in progress.

FAIL ☐ **[Failed]** (FAIL): Auto-tuning has failed.

dOnE ☐ **[Done]** (dOnE): The stator resistance measured by the auto-tuning function is used to control the motor.

PHr	❑ **[Output Ph rotation]**	[ABC] (AbC)

AbC ☐ **[ABC]** (AbC): Forward

ACb ☐ **[ACB]** (ACb): Reverse

This parameter can be used to reverse the direction of rotation of the motor without reversing the wiring.

Parameters that can be changed during operation or when stopped

Code	Name/Description		Factory setting
ITH	❑ **[Mot. therm. current]**	0 to 1.1 or 1.2 In (1) according to rating	According to drive rating
	Motor thermal protection current, to be set to the rated current indicated on the motor nameplate. See page 195		
ACC	❑ **[Acceleration]**	0.1 to 999.9 s	3.0 s
	Time to accelerate from 0 to the [Rated motor freq.] (FrS) (page 36). Make sure that this value is compatible with the inertia being driven.		
dEC	❑ **[Deceleration]**	0.1 to 999.9 s	3.0 s
	Time to decelerate from the [Rated motor freq.] (FrS) (page 36) to 0. Make sure that this value is compatible with the inertia being driven.		
LSP	❑ **[Low speed]**		0
	Motor frequency at minimum reference, can be set between 0 and [High speed] (HSP).		
HSP	❑ **[High speed]**		50 Hz
	Motor frequency at maximum reference, can be set between [Low speed] (LSP) and [Max frequency] (tFr). The factory setting changes to 60 Hz if [Standard mot. freq] (bFr) = [60Hz NEMA] (60).		

(1) In corresponds to the rated drive current indicated in the Installation Manual and on the drive nameplate.

[1.2 MONITORING] (SUP-)

With graphic display terminal:

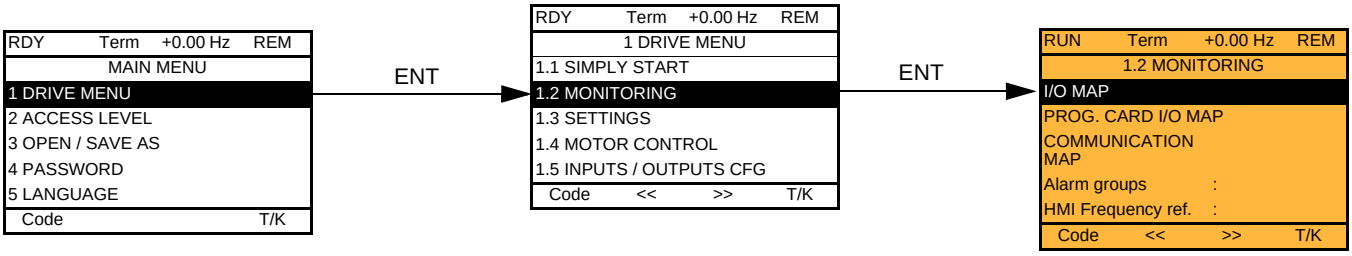

With integrated display terminal:

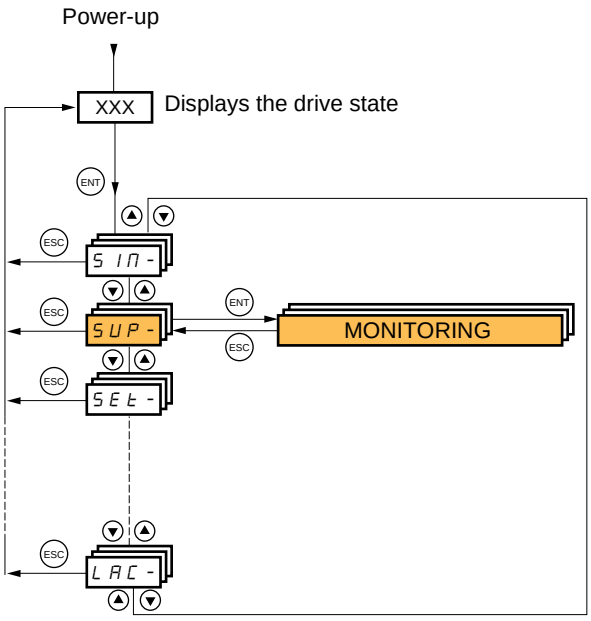

With graphic display terminal

This menu can be used to display the inputs/outputs, the drive internal states and values, and the communication data and values.

```
RUN        Term      +50.00 Hz   REM
          1.2 MONITORING
I/O MAP
PROG. CARD I/O MAP
COMMUNICATION MAP
Alarm groups:
HMI Frequency ref.:
Code        <<        >>        T/K
```

- I/O MAP → I/O
- PROG. CARD I/O MAP → I/O of the Controller Inside card if it is present
- COMMUNICATION MAP → Communication data and values
- Alarm groups: / HMI Frequency ref.: → Drive internal drive states and values (see page 45)

I/O

```
RUN        Term      +50.00 Hz   REM
          I/O MAP
LOGIC INPUT MAP
ANALOG INPUTS IMAGE
LOGIC OUTPUT MAP
ANALOG OUTPUTS IMAGE
FREQ. SIGNAL IMAGE
Code                            T/K
```

Move from one screen to another (from LOGIC INPUT MAP to FREQ. SIGNAL IMAGE) by turning the navigation button

State 0
State 1

```
RUN        Term-{}-  +50.00 Hz   REM
          LOGIC INPUT MAP
   PR  LI1  LI2  LI3  LI4  LI5  LI6  LI7
1
0
   LI8 LI9 LI10 LI11 LI12 LI13 LI14
1
0
           <<        >>        T/K
```

Access to the selected input or output configuration: Press ENT.

```
RUN        Term      +50.00 Hz   REM
          LI1 assignment
Forward
Pre Fluxing
LI1 On Delay        :        0 ms
           <<        >>        T/K
```

```
RUN        Term      +50.00 Hz   REM
          ANALOG INPUTS IMAGE
AI1                 :      9.87 V
AI2                 :      2.35 mA
Code       <<        >>        T/K
```

ENT

```
RUN        Term      +50.00 Hz   REM
          AI1 assignment
Ref.1 channel
Forced local
Torque reference
AI1 min value       :        0.0 V
AI1 max value       :       10.0 V
                                T/K
```

State 0
State 1

```
RUN        Term      +50.00 Hz   REM
          LOGIC OUTPUT MAP
R1  R2  LO
LOA:            0000000000000010b
           <<        >>        T/K
```

ENT

```
RUN        Term      +50.00 Hz   REM
          LO1 assignment
No
LO1 delay time      :        0 ms
LO1 active at       :        1
LO1 holding time    :        0 ms
           <<        >>        T/K
```

```
RUN        Term      +50.00 Hz   REM
          ANALOG OUTPUTS IMAGE
AO1                 :      9.87 V
Code       <<        >>        T/K
```

ENT

```
RUN        Term      +50.00 Hz   REM
          AO1 assignment
Motor freq.
AO1 min output      :        4 mA
AO1 max output      :       20 mA
AO1 Filter          :       10 ms
                                T/K
```

```
RUN        Term      +50.00 Hz   REM
          FREQ. SIGNAL IMAGE
RP input            :     25.45 kHz
Encoder             :      225 kHz
Code       <<        >>        T/K
```

ENT

```
RUN        Term      +50.00 Hz   REM
          RP assignment
Frequency ref.
RP min value        :        2 kHz
RP max value        :       50 kHz
RP filter           :        0 ms
                                T/K
```

With graphic display terminal

Controller Inside card I/O

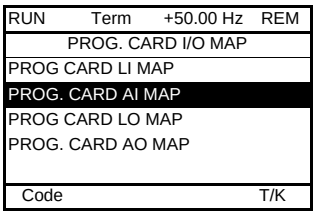

Move from one screen to another
(from PROG CARD LI MAP
to PROG. CARD AO MAP)
by turning the navigation button

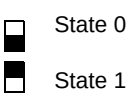

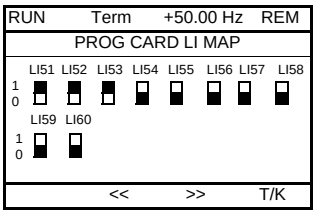

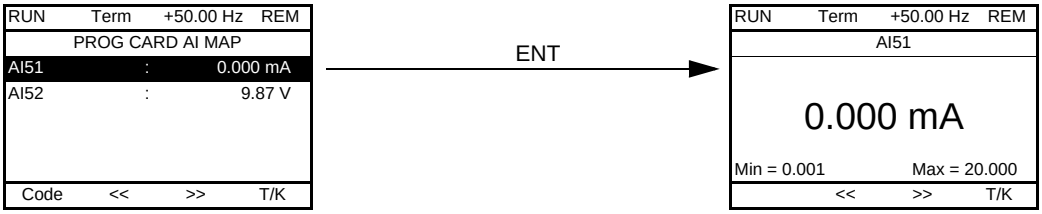

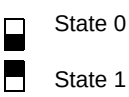

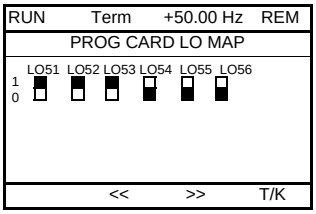

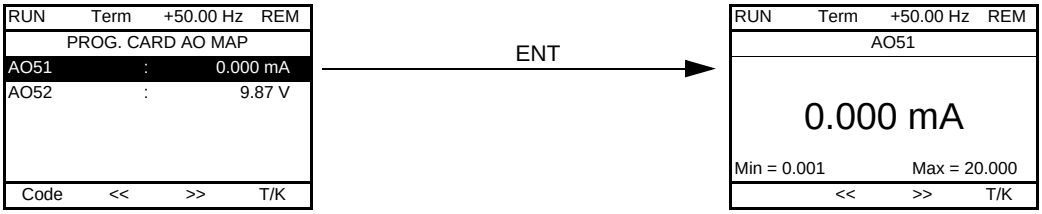

With graphic display terminal

Communication

RUN	Term	+50.00 Hz	REM
COMMUNICATION MAP			
Command Channel:		Modbus	
Cmd value:		ABCD Hex	
Active ref. channel:		CANopen	
Frequency ref.:		- 12.5 Hz	
ETA status word:		2153 Hex	
Code			T/K

W3141: F230 Hex
W2050: F230 Hex
W4325: F230 Hex
W0894: F230 Hex
COM. SCANNER INPUT MAP
COM SCAN OUTPUT MAP
CMD. WORD IMAGE
FREQ. REF. WORD MAP
MODBUS NETWORK DIAG
MODBUS HMI DIAG
CANopen MAP
PROG. CARD SCANNER

[COMMUNICATION MAP] indicates the types of bus used for control or reference, the corresponding command and reference values, the status word, the words selected in the [DISPLAY CONFIG] menu, etc.
The display format (hexadecimal or decimal) can be configured in the [DISPLAY CONFIG.] menu.

RUN	Term	+50.00 Hz	REM
COM. SCANNER INPUT MAP			
Com Scan In1 val.:			0
Com Scan In2 val.:			0
Com Scan In3 val.:			0
Com Scan In4 val.:			0
Com Scan In5 val.:			0
Code			T/K
Com Scan In6 val.:			0
Com Scan In7 val.:			0
Com Scan In8 val.:			0

RUN	Term	+50.00 Hz	REM
COM SCAN OUTPUT MAP			
Com Scan Out1 val.:			0
Com Scan Out2 val.:			0
Com Scan Out3 val.:			0
Com Scan Out4 val.:			0
Com Scan Out5 val.:			0
Code			T/K
Com Scan Out6 val.:			0
Com Scan Out7 val.:			0
Com Scan Out8 val.:			0

RUN	Term	+50.00 Hz	REM
CMD. WORD IMAGE			
Modbus cmd.:		0000 Hex.	
CANopen cmd.:		0000 Hex.	
COM. card cmd.:		0000 Hex.	
Prog. card cmd:		0000 Hex.	
Code			T/K

RUN	Term	+50.00 Hz	REM
FREQ. REF. WORD MAP			
Modbus ref.:		0.0 Hz	
CANopen ref.:		0.0 Hz	
Ref. Com. card:		0.0 Hz	
Prog. Card ref:		0.0 Hz	
Code			T/K

[COM. SCANNER INPUT MAP] and [COM SCAN OUTPUT MAP]:
Visualization of registers exchanged periodically (8 input and 8 output) for integrated Modbus and for fieldbus cards.

With graphic display terminal

Communication (continued)

The state of the LEDs, the periodic data, the address, the speed, and the format, etc,. is given for each bus.

⊗ LED off
⊗ LED on

RUN	Term	+50.00 Hz	REM
COMMUNICATION MAP			
Command Channel:		Modbus	
Cmd value:		ABCD Hex	
Active ref. channel:		CANopen	
Frequency ref.:		- 12.5 Hz	
ETA status word:		2153 Hex	
Code			T/K

W3141 : F230 Hex
W2050 : F230 Hex
W4325 : F230 Hex
W0894 : F230 Hex
COM. SCANNER INPUT MAP
COM SCAN OUTPUT MAP
CMD. WORD IMAGE
FREQ. REF. WORD MAP
MODBUS NETWORK DIAG
MODBUS HMI DIAG
CANopen MAP
PROG. CARD SCANNER

Communication via Modbus

RUN	Term	+50.00 Hz	REM
MODBUS NETWORK DIAG			
COM LED :			⊗
Mb NET frames nb.			
Mb NET CRC errors			
Code			T/K

Communication via the graphic display terminal

RUN	Term	+50.00 Hz	REM
MODBUS HMI DIAG			
COM LED :			⊗
Mb HMI frames nb.			
Mb HMI CRC errors			
Code			T/K

Communication via CANopen

RUN	Term	+50.00 Hz	REM
CANopen MAP			
RUN LED :			⊗
ERR LED :			⊗
PDO1 IMAGE			
PDO2 IMAGE			
PDO3 IMAGE			
Code			T/K

Canopen NMT state
Number of TX PDO 0
Number of RX PDO 0
Error codes 0
RX Error Counter 0
TX Error Counter 0

PDO images are only visible if CANopen has been enabled (address other than OFF) and if the PDOs are active.

PDO configuration using the network tool.
Some PDOs cannot be used.

RUN	Term	+50.00 Hz	REM
PDO1 IMAGE			
Received PDO1-1		: FDBA Hex	
Received PDO1-2			
Received PDO1-3			
Received PDO1-4			
Transmit PDO1-1		: FDBA Hex	
Code			T/K

Transmit PDO1-2
Transmit PDO1-3
Transmit PDO1-4

RUN	Term	+50.00 Hz	REM
PDO2 IMAGE			
Received PDO2-1		: FDBA Hex	
Received PDO2-2			
Received PDO2-3			
Received PDO2-4			
Transmit PDO2-1		: FDBA Hex	
Code			T/K

Transmit PDO2-2
Transmit PDO2-3
Transmit PDO2-4

RUN	Term	+50.00 Hz	REM
PDO3 IMAGE			
Received PDO3-1		: FDBA Hex	
Received PDO3-2			
Received PDO3-3			
Received PDO3-4			
Transmit PDO3-1		: FDBA Hex	
Code			T/K

Transmit PDO3-2
Transmit PDO3-3
Transmit PDO3-4

With graphic display terminal

Communication (continued)

RUN	Term	+50.00 Hz	REM
COMMUNICATION MAP			
Command Channel:		Modbus	
Cmd value:		ABCD Hex	
Active ref. channel:		CANopen	
Frequency ref.:		- 12.5 Hz	
ETA status word:		2153 Hex	
Code			T/K

W3141 : F230 Hex
W2050 : F230 Hex
W4325 : F230 Hex
W0894 : F230 Hex
COM. SCANNER INPUT MAP
COM SCAN OUTPUT MAP
CMD. WORD IMAGE
FREQ. REF. WORD MAP
MODBUS NETWORK DIAG
MODBUS HMI DIAG
CANopen MAP
PROG. CARD SCANNER

Controller Inside card

RUN	Term	+50.00 Hz	REM
PROG. CARD SCANNER			
Input scanner			
Output scanner			
Code			T/K

RUN	Term	+50.00 Hz	REM
Input scanner			
Prg.card. scan in 1:			0
Prg.card. scan in 2:			0
Prg.card. scan in 3:			0
Prg.card. scan in 4:			0
Prg.card. scan in 5:			0
Code			T/K
Prg.card. scan in 6:			0
Prg.card. scan in 7:			0
Prg.card. scan in 8:			0

RUN	Term	+50.00 Hz	REM
Output scanner			
Prog.card.scan Out1:			0
Prog.card.scan Out2:			0
Prog.card.scan Out3:			0
Prog.card.scan Out4:			0
Prog.card.scan Out5:			0
Code			T/K
Prog.card.scan Out6:			0
Prog.card.scan Out7:			0
Prog.card.scan Out8:			0

[Input scanner] and [Output scanner]:
Visualization of registers exchanged periodically (8 input and 8 output).

With graphic display terminal: Drive internal states and values

Name/Description	
[Alarm groups] (ALGr)	Current alarm group numbers
[HMI Frequency ref.] (LFr)	in Hz. Frequency reference via the graphic display terminal (can be accessed if the function has been configured)
[Internal PID ref.] (rPI)	as a process value. PID reference via graphic display terminal (can be accessed if the function has been configured)
[Multiplying coeff.] (MFr)	as a % (can be accessed if [Multiplier ref. -] (MA2,MA3) page 130 has been assigned)
[Frequency ref.] (FrH)	in Hz
[Output frequency] (rFr)	in Hz
[Measured output fr.] (MMF)	in Hz: The measured motor speed is displayed if an encoder card has been inserted, otherwise 0 appears.
[Pulse in. work. freq.] (FqS)	in Hz: Frequency of the "Pulse input" input used by the [FREQUENCY METER] (FqF-) function, page 207
[Motor current] (LCr)	in A
[Motor speed] (SPd)	in rpm
[Motor voltage] (UOP)	in V
[Motor power] (OPr)	as a % of the rated power
[Motor torque] (Otr)	as a % of the rated torque
[Mains voltage] (ULn)	in V. Line voltage from the point of view of the DC bus, motor running or stopped
[Motor thermal state] (tHr)	as a %
[Drv. thermal state] (tHd)	as a %
[DBR thermal state] (tHb)	as a % (can be accessed if [DB res. protection] (brO) has been configured, see page 208)
[Input Power] (IPr)	in kW (electrical power consumed by the drive)
[Consumption] (IPHr)	in Wh, kWh or MWh (accumulated electrical consumption of drive)
[Run time] (rtH)	in seconds, minutes or hours (length of time the motor has been switched on)
[Power on time] (PtH)	in seconds, minutes or hours (length of time the drive has been switched on)
[Proc. Operat. Time] (PEt)	in hours (length of time the process has been switched on) This parameter can be initialized by the user if the drive is replaced, in order to maintain a record of previous times.
[IGBT alarm counter] (tAC)	in seconds (length of time the “IGBT temperature” alarm has been active)
[PID reference] (rPC)	as a process value (can be accessed if the PID function has been configured)
[PID feedback] (rPF)	as a process value (can be accessed if the PID function has been configured)
[PID error] (rPE)	as a process value (can be accessed if the PID function has been configured)
[PID Output] (rPO)	in Hz (can be accessed if the PID function has been configured)
[Date/Time] (CLO)	Current date and time generated by the Controller Inside card (can be accessed if the card has been inserted)
[- - - - 2] (o02) to [- - - - 6] (o06)	Words generated by the Controller Inside card (can be accessed if the card has been inserted)
[Config. active] (CnFS)	Active configuration [Config. n°0, 1 or 2]
[Utilised param. set] (CFPS)	[Set n°1, 2 or 3] (can be accessed if parameter switching has been enabled, see page 176)
[ALARMS] (ALr-)	List of current alarms. If an alarm is present, a ✓ appears.
[OTHER STATUS] (SSt-)	List of secondary states: - [In motor fluxing] (FLX): In motor fluxing - [PTC1 alarm] (PtC1): Probe alarm 1 - [PTC2 alarm] (PtC2): Probe alarm 2 - [LI6=PTC alarm] (PtC3): LI6 = PTC probe alarm - [Fast stop in prog.] (FSt): Fast stop in progress - [Current Th. attained] (CtA): Current threshold attained ([Current threshold] (Ctd) page 60) - [Freq. Th. attained] (FtA): Frequency threshold attained ([Freq. threshold] (Ftd) page 60) - [Freq. Th. 2 attained] (F2A): 2nd frequency threshold attained ([Freq. threshold 2] (F2d) page 60) - [Frequency ref. att.] (SrA): Frequency reference attained - [Motor th. state att.] (tSA): Motor 1 thermal state attained - [External fault alarm] (EtF): External fault alarm - [Auto restart] (AUtO): Automatic restart in progress - [Remote] (FtL): Line mode control - [Auto-tuning] (tUn): Performing auto-tuning - [Undervoltage] (USA): Undervoltage alarm - [Cnfg.1 act.] (CnF1): Configuration 1 active - [Cnfg.2 act.] (CnF2): Configuration 2 active - [HSP attained] (FLA): High speed attained - [Set 1 active] (CFP1): Parameter set 1 active - [Set 2 active] (CFP2): Parameter set 2 active - [Set 3 active] (CFP3): Parameter set 3 active - [In braking] (brS): Drive braking - [DC bus loading] (dbL): DC bus loading - [Forward] (MFrd): Motor running forward - [Reverse] (MrrS): Motor running in reverse - [High torque alarm] (ttHA): Motor torque greater than high threshold [High torque thd.] (ttH) page 60. - [Low torque alarm] (ttLA): Motor torque less than low threshold [Low torque thd.] (ttL) page 60. - [Freq. meter Alarm] (FqLA): Measured speed threshold attained: [Pulse warning thd.] (FqL) page 60.

With integrated display terminal

This menu can be used to display the drive inputs, states and internal values.

Code	Name/Description	Adjustment range	Factory setting
IOM-	**I/O MAP**		
LIA-	**Logic input functions**		
LIA to LI4A	Can be used to display the functions assigned to each input. If no functions have been assigned, nO is displayed. Use the ▲ and ▼ arrows to scroll through the functions. If a number of functions have been assigned to the same input, check that they are compatible.		
LIS1	**State of logic inputs LI1 to LI8**		
	Can be used to visualize the state of logic inputs LI1 to LI8 (display segment assignment: high = 1, low = 0) 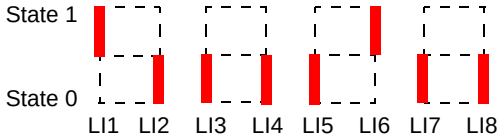 Example above: LI1 and LI6 are at 1; LI2 to LI5, LI7 and LI8 are at 0.		
LIS2	**State of logic inputs LI9 to LI14 and Power Removal**		
	Can be used to visualize the state of logic inputs LI19to LI14 and PR (Power Removal) (display segment assignment: high = 1, low = 0) 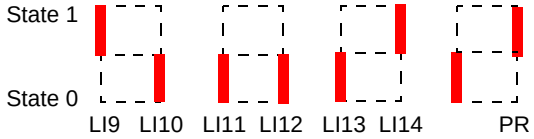 Example above: LI9 and LI14 are at 1, LI10 to LI13 are at 0 and PR (Power Removal) is at 1.		
AIA-	**Analog input functions**		
AI1A AI2A AI3A AI4A	Can be used to display the functions assigned to each input. If no functions have been assigned, nO is displayed. Use the ▲ and ▼ arrows to scroll through the functions. If a number of functions have been assigned to the same input, check that they are compatible.		

With integrated display terminal: Drive internal states and values

Code	Name/Description	Unit
ALGr	**Alarm groups:** Current alarm group numbers	
rPI	**Internal PID reference:** PID reference via graphic display terminal (can be accessed if the function has been configured).	as a process value
MFr	**Multiplication coefficient** (can be accessed if [Multiplier ref. -] (MA2,MA3) page 130 has been assigned)	%
FrH	**Frequency ref.**	Hz
rFr	**Output frequency**	Hz
MMF	**The measured motor speed is displayed** if an encoder card has been inserted, otherwise 0 appears.	Hz
FqS	**Frequency of the "Pulse input"** used by the **[FREQUENCY METER] (FqF-)** function, page 207	Hz
LCr	**Motor current**	A
SPd	**Motor speed**	rpm
UOP	**Motor voltage**	V
OPr	**Motor power**	%
Otr	**Motor torque**	%
ULn	**Line voltage:** Line voltage from the point of view of the DC bus, motor running or stopped.	V
tHr	**Motor thermal state**	%
tHd	**Drive thermal state**	%
tHb	**DBR thermal state:** as a % (can be accessed if [DB res. protection] (brO) has been configured, page 208)	%
IPr	**Electrical power consumed by the drive**	W or kW
IPHr	**Accumulated electrical consumption of drive**	Wh, kWh or MWh
rtH	**Run time:** Length of time the motor has been turned on	seconds, minutes or hours
PtH	**Power on time:** Length of time the drive has been turned on	
PEt	**Length of time the process has been turned on:** in hours. This parameter can be initialized by the user if the drive is replaced, in order to maintain a record of previous times.	hours
tAC	**IGBT alarm counter:** Length of time the “IGBT temperature” alarm has been active	seconds
rPC	**PID reference:** Can be accessed if the PID function has been configured	as a process value
rPF	**PID feedback:** Can be accessed if the PID function has been configured	
rPE	**PID error:** Can be accessed if the PID function has been configured	
rPO	**PID Output:** Can be accessed if the PID function has been configured	Hz
CLO-	**tIME, dAY:** Current date and time generated by the Controller Inside card (can be accessed if the card has been inserted)	
o02 ... o06	**- - - - 2:** Word generated by the Controller Inside card (can be accessed if the card has been inserted) ... **- - - - 6:** Word generated by the Controller Inside card (can be accessed if the card has been inserted)	
CnFS	**Config. active:** CnF0, 1 or 2 (can be accessed if motor or configuration switching has been enabled, see page 181)	
CFPS	**Utilised param. set:** CFP1, 2 or 3 (can be accessed if parameter switching has been enabled, see page 176)	

With graphic display terminal:

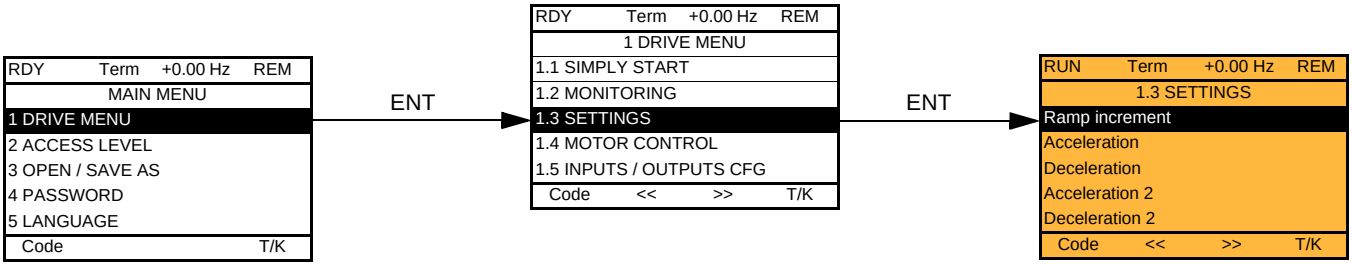

With integrated display terminal:

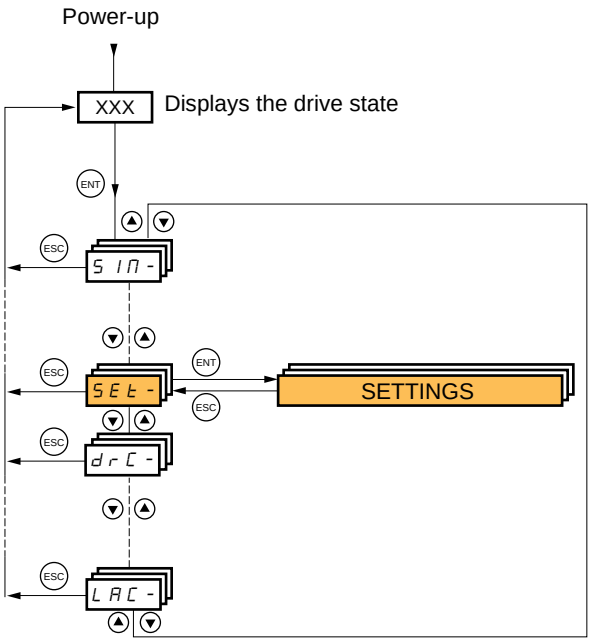

[1.3 SETTINGS] (SEt-)

The adjustment parameters can be modified with the drive running or stopped.

⚠ DANGER

UNINTENDED EQUIPMENT OPERATION

- Check that changes made to the settings during operation do not present any danger.
- We recommend stopping the drive before making any changes.

Failure to follow these instructions will result in death or serious injury.

Code	Name/Description	Adjustment range	Factory setting
Inr 0.01 0.1 1	❑ **[Ramp increment]** ☐ **[0.01]**: Ramp up to 99.99 seconds ☐ **[0.1]**: Ramp up to 999.9 seconds ☐ **[1]**: Ramp up to 9,000 seconds This parameter is valid for [Acceleration] (ACC), [Deceleration] (dEC), [Acceleration 2] (AC2) and [Deceleration 2] (dE2).	0.01 - 0.1 - 1	0.1
ACC	❑ **[Acceleration]** Time to accelerate from 0 to the [Rated motor freq.] (FrS) (page 65). Make sure that this value is compatible with the inertia being driven.	0.01 to 9,000 s (1)	3.0 s
dEC	❑ **[Deceleration]** Time to decelerate from the [Rated motor freq.] (FrS) (page 65) to 0. Make sure that this value is compatible with the inertia being driven.	0.01 to 9,000 s (1)	3.0 s
AC2 ★	❑ **[Acceleration 2]** See page 133 Time to accelerate from 0 to the [Rated motor freq.] (FrS). Make sure that this value is compatible with the inertia being driven.	0.01 to 9,000 s (1)	5.0 s
dE2 ★	❑ **[Deceleration 2]** See page 133 Time to decelerate from the [Rated motor freq.] (FrS) to 0. Make sure that this value is compatible with the inertia being driven.	0.01 to 9,000 s (1)	5.0 s
tA1 ★	❑ **[Begin Acc round]** See page 132 Rounding of start of acceleration ramp as a % of the [Acceleration] (ACC) or [Acceleration 2] (AC2) ramp time.	0 to 100%	10%
tA2 ★	❑ **[End Acc round]** See page 132 - Rounding of end of acceleration ramp as a % of the [Acceleration] (ACC) or [Acceleration 2] (AC2) ramp time. - Can be set between 0 and (100% – [Begin Acc round] (tA1))		10%
tA3 ★	❑ **[Begin Dec round]** See page 132 Rounding of start of deceleration ramp as a % of the [Deceleration] (dEC) or [Deceleration 2] (dE2) ramp time.	0 to 100%	10%

(1) Range 0.01 to 99.99 s or 0.1 to 999.9 s or 1 to 9,000 s according to [Ramp increment] (Inr).

★ These parameters only appear if the corresponding function has been selected in another menu. When the parameters can also be accessed and adjusted from within the configuration menu for the corresponding function, their description is detailed in these menus, on the pages indicated, to aid programming.

Code	Name/Description	Adjustment range	Factory setting
tA4 ★	❑ **[End Dec round]** See page 132 - Rounding of end of deceleration ramp as a % of the [Deceleration] (dEC) or [Deceleration 2] (dE2) ramp time. - Can be set between 0 and (100% – [Begin Dec round] (tA3))		10%
LSP	❑ **[Low speed]** Motor frequency at minimum reference, can be set between 0 and [High speed] (HSP).		0 Hz
HSP	❑ **[High speed]** Motor frequency at maximum reference, can be set between [Low speed] (LSP) and [Max frequency] (tFr). The factory setting changes to 60 Hz if [Standard mot. freq] (bFr) = [60 Hz NEMA] (60).		50 Hz
ItH	❑ **[Mot. therm. current]** Motor thermal protection current, to be set to the rated current indicated on the motor nameplate. See page 195	0 to 1.1 or 1.2 In (1) according to rating	According to drive rating
SPG	❑ **[Speed prop. gain]** Speed loop proportional gain	0 to 1,000%	40%
SIt	❑ **[Speed time integral]** Speed loop integral time constant.	1 to 1,000%	100%
SFC	❑ **[K speed loop filter]** Speed loop filter coefficient.	0 to 100	0

(1) In corresponds to the rated drive current indicated in the Installation Manual or on the drive nameplate.

★ These parameters only appear if the corresponding function has been selected in another menu. When the parameters can also be accessed and adjusted from within the configuration menu for the corresponding function, their description is detailed in these menus, on the pages indicated, to aid programming.

Adjusting the [K speed loop filter] (SFC), [Speed prop. gain] (SPG), and [Speed time integral] (SIt) parameters

- The following parameters can only be accessed in vector control profiles: [Motor control type] (Ctt) page 69 = [SVC V] (UUC), [Energy Sav.] (nLd) and [Sync. mot.] (SYn).
- The factory settings are suitable for most applications.

General case: Setting with [K speed loop filter] (SFC) = 0

The regulator is an “IP” type with filtering of the speed reference, for applications requiring flexibility and stability (high inertia, for example).

- [Speed prop. gain] (SPG) affects excessive speed.
- [Speed prop. gain] (SIt) affects the passband and response time.

Initial response

Reference division

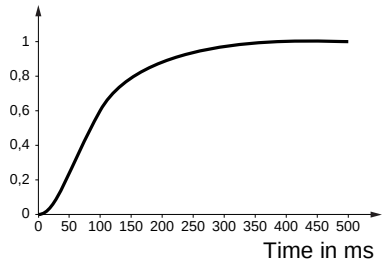

Reduction in SIT ↘

Reference division

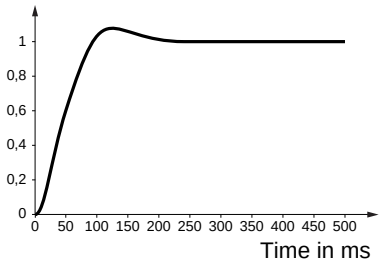

Reduction in SIT ↘↘

Reference division

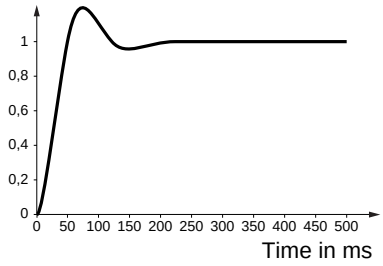

Initial response

Reference division

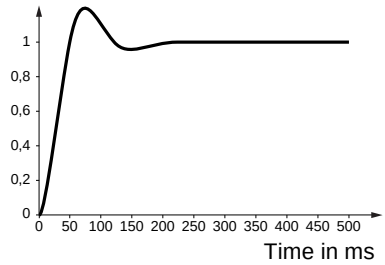

Increase in SPG ↗

Reference division

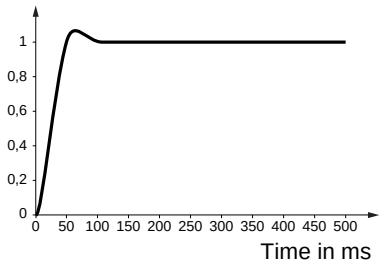

Increase in SPG ↗↗

Reference division

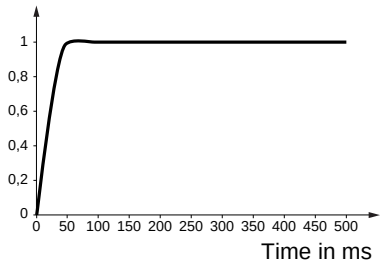

Special case: Parameter [K speed loop filter] (SFC) not 0

This parameter must be reserved for specific applications that require a short response time (trajectory positioning or servo control).

- When set to 100 as described above the regulator is a “PI” type, without filtering of the speed reference.
- Settings between 0 and 100 will obtain an intermediate function between the settings below and those on the previous page.

Example: Setting with [K speed loop filter] (SFC) = 100

- [Speed prop. gain] (SPG) affects the passband and response time.
- [Speed time integral] (SIt) affects excessive speed.

Initial response

Reference division

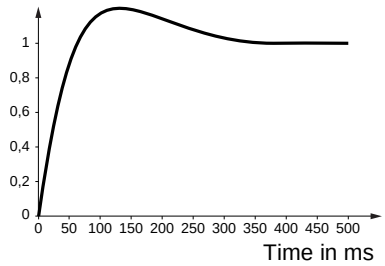

Reduction in SIT ↘

Reference division

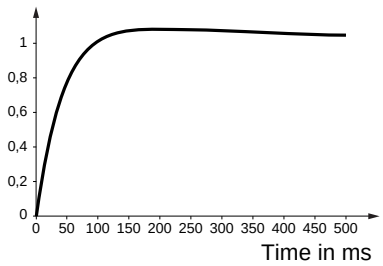

Reduction in SIT ↘↘

Reference division

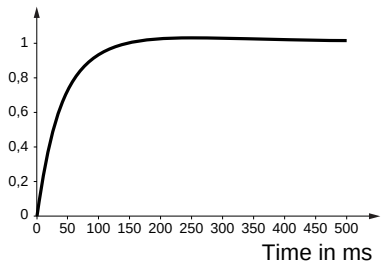

Initial response

Reference division

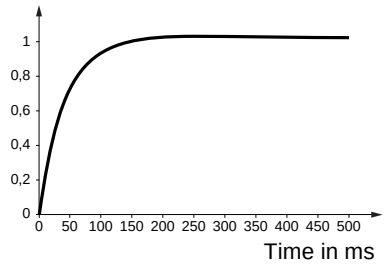

Increase in SPG ↗

Reference division

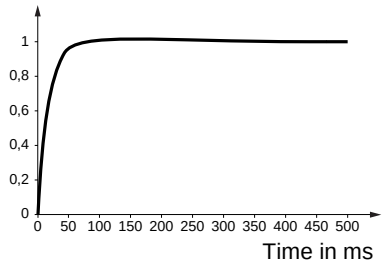

Increase in SPG ↗↗

Reference division

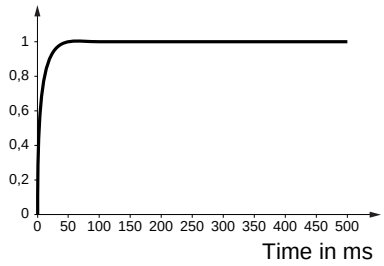

Code	Name/Description	Adjustment range	Factory setting
UFr ★	❑ **[IR compensation]** See page 73	25 to 200%	100%
SLP ★	❑ **[Slip compensation]** See page 73	0 to 300%	100%
dCF ★	❑ **[Ramp divider]** See page 135	0 to 10	4
IdC ★	❑ **[DC inject. level 1]** See page 136 Level of DC injection braking current activated via logic input or selected as stop mode. **CAUTION** Check that the motor will withstand this current without overheating. **Failure to follow these instructions can result in equipment damage.**	0.1 to 1.1 or 1.2 In (1) according to rating	0.64 In (1)
tdI ★	❑ **[DC injection time 1]** See page 136 Maximum current injection time [DC inject. level 1] (IdC). After this time the injection current becomes [DC inject. level 2] (IdC2).	0.1 to 30 s	0.5 s
IdC2 ★	❑ **[DC inject. level 2]** See page 136 Injection current activated by logic input or selected as stop mode, once period of time [DC injection time 1] (tdI) has elapsed. **CAUTION** Check that the motor will withstand this current without overheating. **Failure to follow these instructions can result in equipment damage.**	0.1 In (1) to [DC inject. level 1] (IdC)	0.5 In (1)
tdC ★	❑ **[DC injection time 2]** See page 136 Maximum injection time [DC inject. level 2] (IdC2) for injection selected as stop mode only.	0.1 to 30 s	0.5 s

(1) In corresponds to the rated drive current indicated in the Installation Manual or on the drive nameplate.

★ These parameters only appear if the corresponding function has been selected in another menu. When the parameters can also be accessed and adjusted from within the configuration menu for the corresponding function, their description is detailed in these menus, on the pages indicated, to aid programming.

Code	Name/Description	Adjustment range	Factory setting
SdC1 ★	❑ **[Auto DC inj. level 1]** Level of standstill DC injection current. This parameter can be accessed if [Auto DC injection] (AdC) page 137 is not [No] (nO). This parameter is forced to 0 if [Motor control type] (Ctt) page 69 = [Sync. mot.] (SYn). **CAUTION** Check that the motor will withstand this current without overheating. **Failure to follow these instructions can result in equipment damage.**	0 to 1.1 or 1.2 In (1) according to rating	0.7 In (1)
tdC1 ★	❑ **[Auto DC inj. time 1]** Standstill injection time. This parameter can be accessed if [Auto DC injection] (AdC) page 137 is not [No] (nO) If [Motor control type] (Ctt) page 69 = [Sync. mot.] (SYn) this time corresponds to the zero speed maintenance time.	0.1 to 30 s	0.5 s
SdC2 ★	❑ **[Auto DC inj. level 2]** 2nd level of standstill DC injection current. This parameter can be accessed if [Auto DC injection] (AdC) page 137 is not [No] (nO). This parameter is forced to 0 if [Motor control type] (Ctt) page 69 = [Sync. mot.] (SYn). **CAUTION** Check that the motor will withstand this current without overheating. **Failure to follow these instructions can result in equipment damage.**	0 to 1.1 or 1.2 In (1) according to rating	0.5 In (1)
tdC2 ★	❑ **[Auto DC inj. time 2]** 2nd standstill injection time. This parameter can be accessed if [Auto DC injection] (AdC) page 137 = [Yes] (YES).	0 to 30 s	0 s

AdC	SdC2	Operation
YES	x	
Ct	≠ 0	
Ct	= 0	
Run command		
Speed		

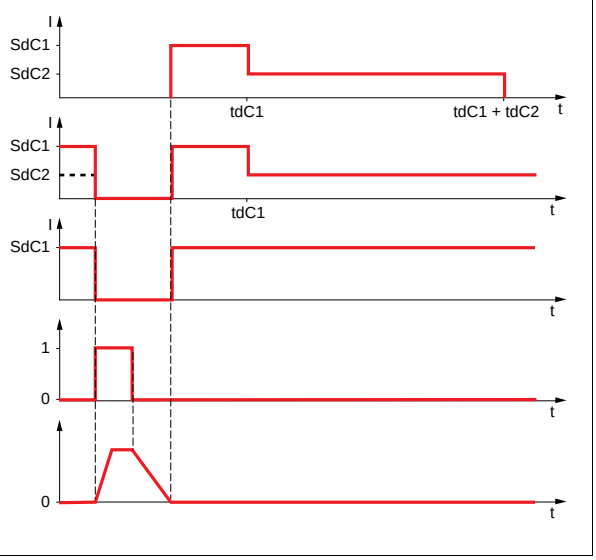

(1) In corresponds to the rated drive current indicated in the Installation Manual or on the drive nameplate.

★ These parameters only appear if the corresponding function has been selected in another menu. When the parameters can also be accessed and adjusted from within the configuration menu for the corresponding function, their description is detailed in these menus, on the pages indicated, to aid programming.

Code	Name/Description	Adjustment range	Factory setting
SFr	❑ **[Switching freq.]**	According to rating	According to rating

Switching frequency setting.

Adjustment range: It can vary between 1 and 16 kHz, but the minimum and maximum values, as well as the factory setting, can be limited in accordance with the type of drive (ATV61H or W), the rating (power and voltage) and the configuration of the [Sinus filter] (OFI) and [Motor surge limit.] (SUL) parameters, page 77.

Adjustment with drive running:
- If the initial value is less than 2 kHz, it is not possible to increase it above 1.9 kHz while running.
- If the initial value is greater than or equal to 2 kHz, a minimum of 2 kHz must be maintained while running.

Adjustment with the drive stopped: No restrictions.

☞ **Note:** In the event of excessive temperature rise, the drive will automatically reduce the switching frequency and reset it once the temperature returns to normal.
.

CAUTION

On ATV61●075N4 to U40N4 drives, if the RFI filters are disconnected (operation on an IT system), the switching frequency of the drive must not exceed 4 kHz.
Failure to follow this instruction can result in equipment damage.

CLI	❑ **[Current Limitation]**	0 to 1.1 or 1.2 In (1) according to rating	1.1 or 1.2 In (1) according to rating

Used to limit the motor current.

☞ **Note:** If the setting is less than 0.25 In, the drive may lock in [Output Phase Loss] (OPF) fault mode if this has been enabled (see page 196). If it is less than the no-load motor current, the limitation no longer has any effect.
.

CAUTION

Check that the motor will withstand this current, particularly in the case of permanent magnet synchronous motors, which are susceptible to demagnetization.
Failure to follow this instruction can result in equipment damage.

CL2 ★	❑ **[I Limit. 2 value]**	0 to 1.1 or 1.2 In (1) according to rating	1.1 or 1.2 In (1) according to rating

See page 168

☞ **Note:** If the setting is less than 0.25 In, the drive may lock in [Output Phase Loss] (OPF) fault mode if this has been enabled (see page 196). If it is less than the no-load motor current, the limitation no longer has any effect.
.

CAUTION

Check that the motor will withstand this current, particularly in the case of permanent magnet synchronous motors, which are susceptible to demagnetization.
Failure to follow this instruction can result in equipment damage.

(1) In corresponds to the rated drive current indicated in the Installation Manual or on the drive nameplate.

★ These parameters only appear if the corresponding function has been selected in another menu. When the parameters can also be accessed and adjusted from within the configuration menu for the corresponding function, their description is detailed in these menus, on the pages indicated, to aid programming.

Code	Name/Description	Adjustment range	Factory setting
FLU	❑ **[Motor fluxing]** ☐ **[Not cont.]** (FnC): Non-continuous mode ☐ **[Continuous]** (FCt): Continuous mode. This option is not possible if [Auto DC injection] (AdC) page 137 is [Yes] (YES) or if [Type of stop] (Stt) page 135 is [Freewheel] (nSt). ☐ **[No]** (FnO): Function inactive. At and above ATV61HD55M3X, ATV61HD90N4 and ATV61HC11Y, if [Motor control type] (Ctt) page 69 = [SVC V] (UUC) or [Energy Sav.] (nLd), this selection cannot be made and the factory setting is replaced by [Not cont.] (FnC). If [Motor control type] (Ctt) = [Sync. mot.] (SYn) the factory setting is replaced by [Not cont.] (FnC). In order to obtain rapid high torque on startup, magnetic flux needs to already have been established in the motor. • In [Continuous] (FCt) mode, the drive automatically builds up flux when it is powered up. • In [Not cont.] (FnC) mode, fluxing occurs when the motor starts up. The flux current is greater than nCr (configured rated motor current) when the flux is established and is then adjusted to the motor magnetizing current... **CAUTION** Check that the motor will withstand this current without overheating. **Failure to follow these instructions can result in equipment damage.** If [Motor control type] (Ctt) page 69 = [Sync. mot.] (SYn), the [Motor fluxing] (FLU) parameter causes the alignment of the rotor and not the fluxing.		[No] (FnO)
tLS	❑ **[Low speed time out]** Maximum operating time at [Low speed] (LSP) (see page 38) Following operation at LSP + SLE for a defined period, a motor stop is requested automatically. The motor restarts if the reference is greater than LSP + SLE and if a run command is still present. Caution: Value 0 corresponds to an unlimited period. ☞ **Note:** If [Low speed time out] (tLS) is not 0, [Type of stop] (Stt) page 135 is forced to [Ramp stop] (rMP) (only if a ramp stop can be configured).	0 to 999.9 s	0 s
SLE	❑ **[Sleep Offset Thres.]** Adjustable restart threshold (offset) following a stop after prolonged operation at [Low speed] (LSP) + [Sleep Offset Thres.] (SLE), in Hz. The motor restarts if the reference rises above (LSP + SLE) and if a run command is still present.	1 to 500 or 599 Hz according to rating	1 Hz
JGF ★	❑ **[Jog frequency]** See page 139 Reference in jog operation	0 to 10 Hz	10 Hz
JGt ★	❑ **[Jog delay]** See page 139 Anti-repeat delay between 2 consecutive jog operations.	0 to 2.0 s	0.5 s

★ These parameters only appear if the corresponding function has been selected in another menu. When the parameters can also be accessed and adjusted from within the configuration menu for the corresponding function, their description is detailed in these menus, on the pages indicated, to aid programming.

Code	Name/Description	Adjustment range	Factory setting
SP2 ★	❑ **[Preset speed 2]** See page 142 Preset speed 2	0 to 500 or 1,000 Hz according to rating	10 Hz
SP3 ★	❑ **[Preset speed 3]** See page 142 Preset speed 3	0 to 500 or 1,000 Hz according to rating	15 Hz
SP4 ★	❑ **[Preset speed 4]** See page 142 Preset speed 4	0 to 500 or 1,000 Hz according to rating	20 Hz
SP5 ★	❑ **[Preset speed 5]** See page 142 Preset speed 5	0 to 500 or 1,000 Hz according to rating	25 Hz
SP6 ★	❑ **[Preset speed 6]** See page 142 Preset speed 6	0 to 500 or 1,000 Hz according to rating	30 Hz
SP7 ★	❑ **[Preset speed 7]** See page 142 Preset speed 7	0 to 500 or 1,000 Hz according to rating	35 Hz
SP8 ★	❑ **[Preset speed 8]** See page 142 Preset speed 8 The factory setting changes to 60 Hz if [Standard mot. freq] (bFr) = [60 Hz NEMA] (60).	0 to 500 or 1,000 Hz according to rating	50 Hz

★ These parameters only appear if the corresponding function has been selected in another menu. When the parameters can also be accessed and adjusted from within the configuration menu for the corresponding function, their description is detailed in these menus, on the pages indicated, to aid programming.

Code	Name/Description	Adjustment range	Factory setting
SrP ★	❑ **[+/-Speed limitation]** See page 146 Limitation of +/- speed variation	0 to 50%	10%
rPG ★	❑ **[PID prop. gain]** See page 153 Proportional gain	0.01 to 100	1
rIG ★	❑ **[PID integral gain]** See page 154 Integral gain	0.01 to 100	1
rdG ★	❑ **[PID derivative gain]** See page 154 Derivative gain	0.00 to 100	0
PrP ★	❑ **[PID ramp]** See page 154 PID acceleration/deceleration ramp, defined to go from [Min PID reference] (PIP1) to [Max PID reference] (PIP2) and vice versa.	0 to 99.9 s	3.0 s
POL ★	❑ **[Min PID output]** See page 154 Minimum value of regulator output in Hz	-500 to 500 or -599 Hz to 599 Hz according to rating	0 Hz
POH ★	❑ **[Max PID output]** See page 154 Maximum value of regulator output in Hz	0 to 500 or 599 Hz according to rating	60 Hz
PAL ★	❑ **[Min fbk alarm]** See page 154 Minimum monitoring threshold for regulator feedback	See page 154 (1)	100
PAH ★	❑ **[Max fbk alarm]** See page 154 Maximum monitoring threshold for regulator feedback	See page 154 (1)	1,000

(1) If a graphic display terminal is not in use, values greater than 9,999 will be displayed on the 4-digit display with a period mark after the thousand digit, e.g. 15.65 for 15,650.

★ These parameters only appear if the corresponding function has been selected in another menu. When the parameters can also be accessed and adjusted from within the configuration menu for the corresponding function, their description is detailed in these menus, on the pages indicated, to aid programming.

Code	Name/Description	Adjustment range	Factory setting
PEr ★	❑ **[PID error Alarm]** See page 154 Regulator error monitoring threshold.	0 to 65,535 (1)	100
PSr ★	❑ **[Speed input%]** See page 155 Multiplying coefficient for predictive speed input.	1 to 100%	100%
rP2 ★	❑ **[Preset ref. PID 2]** See page 158 Preset PID reference	See page 158 (1)	300
rP3 ★	❑ **[Preset ref. PID 3]** See page 158 Preset PID reference	See page 158 (1)	600
rP4 ★	❑ **[Preset ref. PID 4]** See page 158 Preset PID reference	See page 158 (1)	900
LPI ★ nO	❑ **[PID Threshold]** See page 157 PID regulator feedback supervision threshold (alarm can be assigned to a relay or a logic output, page 96). Adjustment range: ☐ **[No]** (nO): Function inactive ☐ between [Min PID feedback] (PIF1) and [Max PID feedback] (PIF2) (2).		100
tPI ★	❑ **[PID Ctrl. time delay]** See page 157 PID regulator feedback supervision time delay	0 to 600 s	0 s

(1) If a graphic display terminal is not in use, values greater than 9,999 will be displayed on the 4-digit display with a period mark after the thousand digit, e.g. 15.65 for 15,650.

★ These parameters only appear if the corresponding function has been selected in another menu. When the parameters can also be accessed and adjusted from within the configuration menu for the corresponding function, their description is detailed in these menus, on the pages indicated, to aid programming.

Code	Name/Description	Adjustment range	Factory setting
tL IM ★	❑ **[Motoring torque lim]** See page 166 Torque limitation in motor mode, as a whole % or in 0.1% increments of the rated torque in accordance with the [Torque increment] (IntP) parameter, page 166.	0 to 300%	100%
tL IG ★	❑ **[Gen. torque lim]** See page 166 Torque limitation in generator mode, as a whole % or in 0.1% increments of the rated torque in accordance with the [Torque increment] (IntP) parameter, page 166.	0 to 300%	100%
CtA	❑ **[Current threshold]** Upper current threshold for [I attained] (CtA) function assigned to a relay or a logic output (see page 96).	0 to 1.1 or 1.2 In (1) according to rating	In (1)
CtdL	❑ **[Low I Threshold]** Lower current threshold for [Low I Th.At.] (CtAL) function assigned to a relay or a logic output (see page 96).	0 to 1.1 or 1.2 In (1) according to rating	0
ttH	❑ **[High torque thd.]** High current threshold for [High tq. att.] (ttHA) function assigned to a relay or a logic output (see page 96), as a % of the rated motor torque.	-300% to +300%	100%
ttL	❑ **[Low torque thd.]** Low current threshold for [Low tq. att.] (ttLA) function assigned to a relay or a logic output (see page 96), as a % of the rated motor torque.	-300% to +300%	50%
FqL ★	❑ **[Pulse warning thd.]** Speed threshold measured by the [FREQUENCY METER] (FqF-) function, page 207, assigned to a relay or a logic output (see page 97).	0 Hz to 30.00 kHz	0 Hz
Ftd	❑ **[Freq. threshold]** High frequency threshold for the [Freq.Th.att.] (FtA) function assigned to a relay or a logic output (see page 96), or used by the [PARAM. SET SWITCHING] (MLP-) function, page 176.	0 to 500 or 599 Hz according to rating	[Standard mot. freq] (bFr)
FtdL	❑ **[Low Freq.Threshold]** Lower frequency threshold for [Low Frq. Th. Attain.] (FtAL) function assigned to a relay or a logic output (see page 96).	0 to 500 or 599 Hz according to rating	0
F2d	❑ **[Frequency 2 threshold]** Frequency threshold for [Freq. Th. 2 attain.] (F2A) function assigned to a relay or a logic output (see page 96), or used by the [PARAM. SET SWITCHING] (MLP-) function, page 176.	0 to 500 or 599 Hz according to rating	[Standard mot. freq] (bFr)
F2dL	❑ **[2 Freq. Threshold]** Lower frequency threshold for [2Low F.Thld] (F2AL) function assigned to a relay or a logic output (see page 96).	0 to 500 or 599 Hz according to rating	0

(1) In corresponds to the rated drive current indicated in the Installation Manual or on the drive nameplate.

★ These parameters only appear if the corresponding function has been selected in another menu. When the parameters can also be accessed and adjusted from within the configuration menu for the corresponding function, their description is detailed in these menus, on the pages indicated, to aid programming.

Code	Name/Description	Adjustment range	Factory setting
FFt	❑ **[Freewheel stop Thd]** See page 135 This parameter supports switching from a ramp stop or a fast stop to a freewheel stop below a low speed threshold. It can be accessed if [Type of stop] (Stt) = [Fast stop] (FSt) or [Ramp stop] (rMP). ☐ 0.0: Does not switch to freewheel stop. ☐ 0.1 to 599 Hz: Speed threshold below which the motor will switch to freewheel stop.	0.0 to 599 Hz	0.0
ttd ★	❑ **[Motor therm. level]** See page 196 Trip threshold for motor thermal alarm (logic output or relay)	0 to 118%	100%
rtd	❑ **[High Freq. Ref. Thr.]** Upper frequency reference threshold for [High Ref.] (rtAH) function assigned to a relay or a logic output (see page 96).	0 to 500 or 599 Hz according to rating	0
rtdL	❑ **[Low Freq. Ref. Thr.]** Lower frequency reference threshold for [Low Ref.] (rtAL) function assigned to a relay or a logic output (see page 96).	0 to 500 or 599 Hz according to rating	0

(1) In corresponds to the rated drive current indicated in the Installation Manual or on the drive nameplate.

★ These parameters only appear if the corresponding function has been selected in another menu. When the parameters can also be accessed and adjusted from within the configuration menu for the corresponding function, their description is detailed in these menus, on the pages indicated, to aid programming.

Code	Name/Description	Adjustment range	Factory setting
JPF	❑ **[Skip Freq.]** Skip frequency. This parameter prevents prolonged operation within an adjustable range around the regulated frequency. This function can be used to prevent a critical speed, which would cause resonance, being reached. Setting the function to 0 renders it inactive.	0 to 500 or 599 Hz according to rating	0 Hz
JF2	❑ **[Skip Freq. 2]** 2nd skip frequency. This parameter prevents prolonged operation within an adjustable range around the regulated frequency. This function can be used to prevent a critical speed, which would cause resonance, being reached. Setting the function to 0 renders it inactive.	0 to 500 or 599 Hz according to rating	0 Hz
JF3	❑ **[3rd Skip Frequency]** 3rd skip frequency. This parameter prevents prolonged operation within an adjustable range around the regulated frequency. This function can be used to prevent a critical speed, which would cause resonance, being reached. Setting the function to 0 renders it inactive.	0 to 500 or 599 Hz according to rating	0 Hz
JFH	❑ **[Skip.Freq.Hysteresis]** Parameter visible if at least one skip frequency [Skip Frequency] (JPF), [Skip Frequency 2] (JF2) or [3rd Skip Frequency] (JF3) is different from 0. Skip frequency range: between (JPF – JFH) and (JPF + JFH), for example. This adjustment is common to all 3 frequencies (JPF, JF2 and JF3).	0.1 to 10 Hz	1 Hz
LUn ★	❑ **[Unld.Thr.Nom.Speed]** See page 211. Underload threshold at rated motor frequency ([Rated motor freq.] (FrS) page 36), as a % of the rated motor torque.	20 to 100%	60%
LUL ★	❑ **[Unld.Thr.0.Speed]** See page 211. Underload threshold at zero frequency, as a % of the rated motor torque.	0 to [Unld.Thr.Nom.Speed] (LUn)	0%
rNUd ★	❑ **[Unld. Freq.Thr. Det.]** See page 211. Underload detection minimum frequency threshold	0 to 500 or 599 Hz according to rating	0 Hz
Srb ★	❑ **[Hysteresis Freq.Att.]** See pages 211 and 212. Maximum deviation between the frequency reference and the motor frequency, which defines steady state operation.	0.3 to 500 or 599 Hz according to rating	0.3 Hz
FtU ★	❑ **[Underload T.B.Rest.]** See page 211. Minimum time permitted between an underload being detected and any automatic restart. In order for an automatic restart to be possible, the value of [Max. restart time] (tAr) page 193 must exceed that of this parameter by at least one minute.	0 to 6 min	0 min

★ These parameters only appear if the corresponding function has been selected in another menu. When the parameters can also be accessed and adjusted from within the configuration menu for the corresponding function, their description is detailed in these menus, on the pages indicated, to aid programming.

Code	Name/Description	Adjustment range	Factory setting
LOC ★	❑ **[Ovld Detection Thr.]** See page 212. Overload detection threshold, as a % of the rated motor current [Rated mot. current] (nCr). This value must be less than the limit current in order for the function to work.	70 to 150%	110%
FtO ★	❑ **[Overload T.B.Rest.]** See page 212. Minimum time permitted between an overload being detected and any automatic restart. In order for an automatic restart to be possible, the value of [Max. restart time] (tAr) page 193 must exceed that of this parameter by at least one minute.	0 to 6 min	0 min
FFd ★	❑ **[NoFlo.Freq.Thres.Ac.]** See page 183. Zero flow detection activation threshold The parameter can be accessed if [PID feedback ass.] (PIF) is not [No] (nO) and if [No Flow Period Det.] (nFd) is not 0.	0 to 500 or 599 Hz according to rating	0 Hz
LFd ★	❑ **[No Flow Offset]** See page 183. Zero flow detection offset The parameter can be accessed if [PID feedback ass.] (PIF) is not [No] (nO) and if [No Flow Period Det.] (nFd) is not 0.	0 to 500 or 599 Hz according to rating	0 Hz
nFFt ★	❑ **[Freq.Th.Sensor. Act.]** See page 183. Zero fluid detection activation threshold The parameter can be accessed if [No Flow Sensor] (nFS) is not [No] (nO).	0 to 500 or 599 Hz according to rating	0 Hz
nFSt ★	❑ **[Flow Times Ctrl]** See page 183. Zero fluid detection activation time delay The parameter can be accessed if [No Flow Sensor] (nFS) is not [No] (nO).	0 to 999 s	10 s
CHt ★	❑ **[Flow.Lim.Th.Active]** See page 185. Function activation threshold, as a % of the max. signal of the assigned input The parameter can be accessed if [Flow.Sen.Inf] (CHI) is not [No] (nO).	0 to 100%	0%
rCHt ★	❑ **[Flo.Lim.Thres. Inact.]** See page 185. Function deactivation threshold, as a % of the max. signal of the assigned input The parameter can be accessed if [Flow.Sen.Inf] (CHI) is not [No] (nO).	0 to 100%	0%
dFL ★	❑ **[Dec. Flow. limit]** See page 185. The parameter can be accessed if [Flow.Sen.Inf] (CHI) is not [No] (nO). Time to decelerate from [Rated motor freq.] (FrS) to 0. Make sure that this value is compatible with the inertia being driven.	0.01 to 9,000 s (1)	5.0 s

(1) Range 0.01 to 99.99 s or 0.1 to 999.9 s or 1 to 9,000 s according to [Ramp increment] (Inr).

★ These parameters only appear if the corresponding function has been selected in another menu. When the parameters can also be accessed and adjusted from within the configuration menu for the corresponding function, their description is detailed in these menus, on the pages indicated, to aid programming.

With graphic display terminal:

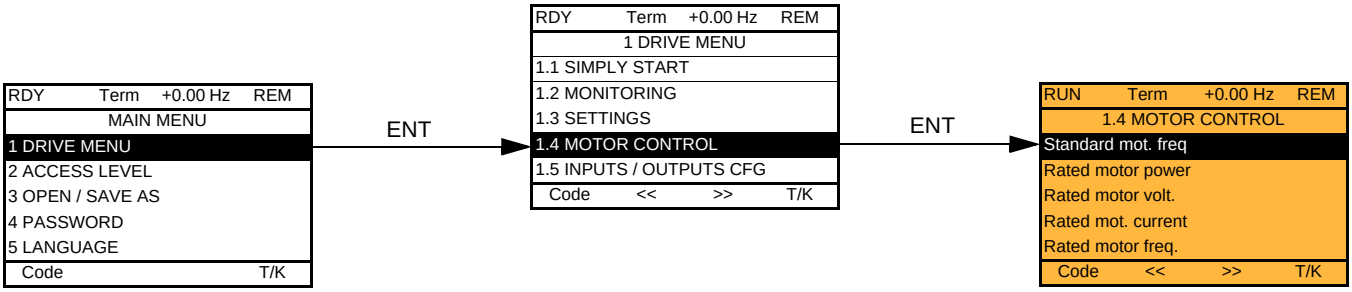

With integrated display terminal:

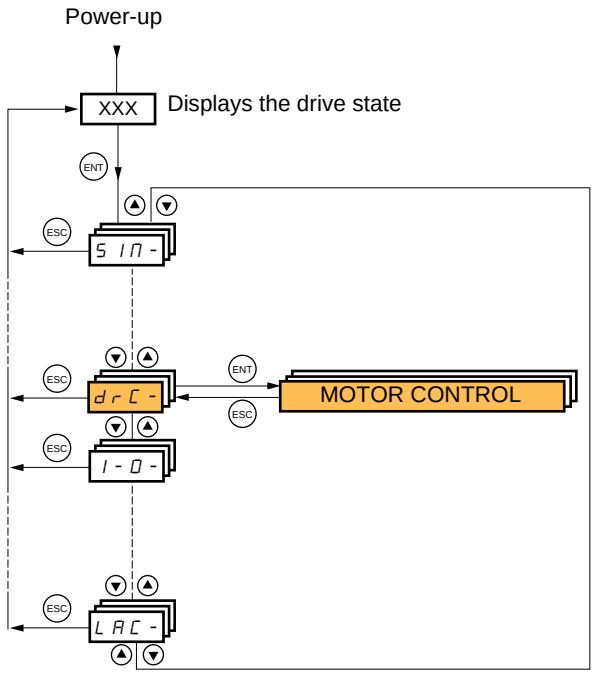

[1.4 MOTOR CONTROL] (drC-)

The parameters in the [1.4 MOTOR CONTROL] (drC-) menu can only be modified when the drive is stopped and no run command is present, with the following exceptions:

- [Auto tuning] (tUn) page 67, which causes the motor to start up.
- Parameters containing the sign ( ) in the code column, which can be modified with the drive running or stopped.

Code	Name/Description	Adjustment range	Factory setting
bFr 50 60	❑ **[Standard mot. freq]** ☐ **[50Hz IEC]** (50): IEC. ☐ **[60Hz NEMA]** (60): NEMA. This parameter modifies the presets of parameters [Rated motor power] (nPr), [Rated motor volt.] (UnS), [Rated mot. current] (nCr), [Rated motor freq.] (FrS), [Rated motor speed] (nSP) and [Max frequency] (tFr) below, [Mot. therm. current] (ItH) page 50, [High speed] (HSP) page 50, [Freq. threshold] (Ftd) page 60, [Freq. threshold 2] (F2d) page 60, [V. constant power] (UCP) page 71, [Freq. Const Power] (FCP) page 71, [Nominal freq sync.] (FrSS) page 72, [Preset speed 8] (SP8) page 142, [Forced Run Ref.] (InHr) page 203.		[50Hz IEC] (50)
nPr	❑ **[Rated motor power]** The parameter cannot be accessed if [Motor control type] (Ctt) page 69 = [Sync. mot.] (SYn) Rated motor power given on the nameplate, in kW if [Standard mot. freq] (bFr) = [50 Hz IEC] (50), in HP if [Standard mot. freq] (bFr) = [60 Hz NEMA] (60).	According to drive rating	According to drive rating
UnS	❑ **[Rated motor volt.]** The parameter cannot be accessed if [Motor control type] (Ctt) page 69 = [Sync. mot.] (SYn) Rated motor voltage given on the nameplate. ATV61●●●M3X: 100 to 240 V ATV61●●●N4: 200 to 480 V ATV61●●●Y: 400 to 690 V	According to drive rating	According to drive rating and [Standard mot. freq] (bFr)
nCr	❑ **[Rated mot. current]** The parameter cannot be accessed if [Motor control type] (Ctt) page 69 = [Sync. mot.] (SYn) Rated motor current given on the nameplate.	0.25 to 1.1 or 1.2 In (1) according to rating	According to drive rating and [Standard mot. freq] (bFr)
FrS	❑ **[Rated motor freq.]** The parameter cannot be accessed if [Motor control type] (Ctt) page 69 = [Sync. mot.] (SYn) Rated motor frequency given on the nameplate. The factory setting is 50 Hz, or preset to 60 Hz if [Standard mot. freq] (bFr) is set to 60 Hz. The maximum value is limited to 599 Hz if [Motor control type] (Ctt) (page 69) is not V/F or if the drive rating is higher than ATV61HD37● or ATV61WD45● or if the drive is an ATV61●●●Y (500 to 690 V). Values between 500 Hz and 599 Hz are only possible in V/F control and for powers limited to 37 kW (50 HP) for the ATV61H ●●● and 45 kW (60 HP) for ATV61W●●●. In this case, configure [Motor control type] (Ctt) before [Rated motor freq.] (FrS).	10 to 500 or 599 Hz according to rating	50 Hz

(1) In corresponds to the rated drive current indicated in the Installation Manual and on the drive nameplate.

Code	Name/Description	Adjustment range	Factory setting
nSP	❑ **[Rated motor speed]** The parameter cannot be accessed if [Motor control type] (Ctt) page 69 = [Sync. mot.] (SYn) Rated motor speed given on the nameplate. 0 to 9,999 rpm then 10.00 to 60.00 krpm on the integrated display terminal. If, rather than the rated speed, the nameplate indicates the synchronous speed and the slip in Hz or as a %, calculate the rated speed as follows: • Nominal speed = Synchronous speed x $\frac{100 - \text{slip as a \%}}{100}$ or • Nominal speed = Synchronous speed x $\frac{50 - \text{slip in Hz}}{50}$ (50 Hz motors) or • Nominal speed = Synchronous speed x $\frac{60 - \text{slip in Hz}}{60}$ (60 Hz motors)	0 to 60,000 rpm	According to drive rating
tFr	❑ **[Max frequency]** The factory setting is 60 Hz, or preset to 72 Hz if [Standard mot. freq] (bFr) is set to 60 Hz. The maximum value is limited by the following conditions: • It must not exceed 10 times the value of de [Rated motor freq.] (FrS) • It cannot exceed 500 Hz if the [Motor control type] (Ctt) (page 69) is not V/F or if the drive rating is higher than ATV61HD37● or ATV61WD45●, or if the drive is an ATV61●●●Y (500 to 690 V). Values between 500 Hz and 599 Hz are only possible in V/F control and for powers limited to 37 kW (50 HP) for the ATV61H ●●● and 45 kW (60 HP) for ATV61W●●●. In this case, configure [Motor control type] (Ctt) before [Max frequency] (tFr).	10 to 500 or 599 Hz according to rating	60 Hz

Code	Name/Description	Factory setting
tUn	❑ **[Auto tuning]**	[No] (nO)

⚠⚠ DANGER

HAZARD OF ELECTRIC SHOCK OR ARC FLASH

- During auto-tuning, the motor operates at rated current.
- Do not service the motor during auto-tuning.

Failure to follow these instructions will result in death or serious injury.

⚠ WARNING

LOSS OF CONTROL

- It is essential that the following parameters [Rated motor volt.] (UnS), [Rated motor freq.] (FrS), [Rated mot. current] (nCr), [Rated motor speed] (nSP) and [Rated motor power] (nPr) are correctly configured before starting auto-tuning for asynchronous motor.
- It is essential that the following parameters [Nominal I sync] (nCrS), [Nom motor spdsync] (nSPS), [Pole pairs.] (PPnS), [Syn. EMF constant] (PHS), [Autotune L d-axis] (LdS) and [Autotune L q-axis] (LqS) are correctly configured before starting auto-tuning for synchronous motor.
- When one or more of these parameters have been changed after auto-tuning has been performed, [Auto tuning] (tUn) will return [No] (nO) and the procedure will have to be repeated.

Failure to follow these instructions can result in death or serious injury.

nO ❑ **[No]** (nO): Auto-tuning not performed.

YES ❑ **[Yes]** (YES): Auto-tuning is performed as soon as possible, then the parameter automatically changes to [Done] (dOnE).

dOnE ❑ **[Done]** (dOnE): Use of the values given the last time auto-tuning was performed.

Note:

- Auto-tuning is only performed if no stop command has been activated. If a "freewheel stop" or "fast stop" function has been assigned to a logic input, this input must be set to 1 (active at 0).
- Auto-tuning takes priority over any run or prefluxing commands, which will be taken into account after the auto-tuning sequence.
- If auto-tuning fails, the drive displays [No] (nO) and, depending on the configuration of [Autotune fault mgt] (tnL) page 208, may switch to [Auto-tuning] (tnF) fault mode.
- Auto-tuning may last for 1 to 2 seconds. Do not interrupt the process. Wait for the display to change to "[Done] (dOnE)" or "[No] (nO)".

AUt	❑ **[Automatic autotune]**	[No] (nO)

nO ❑ **[No]** (nO): Function inactive

YES ❑ **[Yes]** (YES): Auto-tuning is performed on every power-up.

Caution: Same comments as for [Auto tuning] (tUn) above.

If [Profile] (CHCF) = [8 serie] (SE8), then [Automatic autotune] (AUt) is fixed to [No] (nO).

Code	Name/Description	Factory setting
tUS	❑ **[Auto tuning status]** For information only, cannot be modified. ☐ **[Not done]** (tAb): The default stator resistance value is used to control the motor. ☐ **[Pending]** (PEnd): Auto-tuning has been requested but not yet performed. ☐ **[In Progress]** (PrOG): Auto-tuning in progress ☐ **[Failed]** (FAIL): Auto-tuning has failed. ☐ **[Done]** (dOnE): The stator resistance measured by the auto-tuning function is used to control the motor. ☐ **[Customized]** (CUS): Auto-tuning has been performed, but at least one parameter set by this auto-tuning operation has subsequently been modified. The [Auto tuning] (tUn) parameter then returns to [No] (nO). The following auto-tuning parameters are concerned: [Cust. stator R syn] (rSAS) page 72, [R1w] (rSA), [Idw] (IdA), [LFw] (LFA) and [T2w] (trA) page 74.	[Not done] (tAb)
tAb PEnd PrOG FAIL dOnE CUS		
PHr	❑ **[Output Ph rotation]** ☐ **[ABC]** (AbC): Forward ☐ **[ACB]** (ACb): Reverse This parameter can be used to reverse the direction of rotation of the motor without reversing the wiring.	ABC
AbC ACb		

Code	Name/Description	Adjustment range	Factory setting
CtT	❑ **[Motor control type]**		[V/F 2pts] (UF2)
UUC	☐ **[SVC V]** (UUC): Open-loop voltage flux vector control with automatic slip compensation according to the load. It supports operation with a number of motors connected in parallel on the same drive (if the motors are identical).		
UF2	☐ **[V/F 2pts]** (UF2): Simple V/F profile without slip compensation. It supports operation with: - Special motors (wound rotor, tapered rotor, etc.) - A number of motors in parallel on the same drive - High-speed motors - Motors with a low power rating in comparison to that of the drive 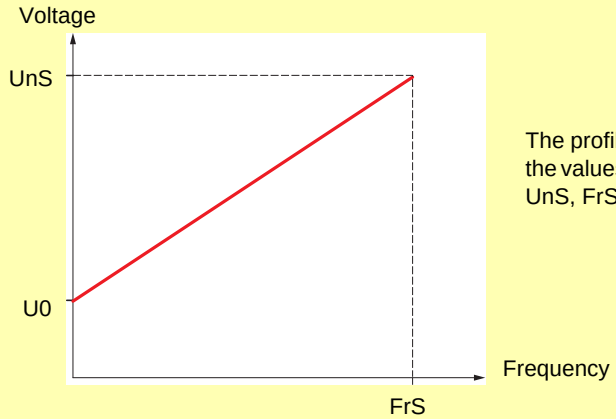 The profile is defined by the values of parameters UnS, FrS and U0.		
UF5	☐ **[V/F 5pts]** (UF5): 5-segment V/F profile: As V/F 2 pts profile but also supports the avoidance of resonance (saturation). 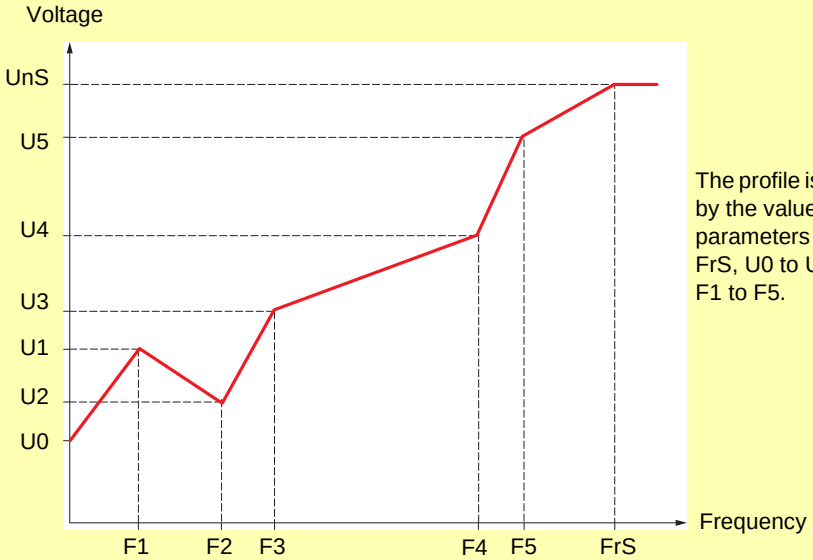 FrS > F5 > F4 > F3 > F2 > F1 The profile is defined by the values of parameters UnS, FrS, U0 to U5 and F1 to F5.		
SYn	☐ **[Sync. mot.]** (SYn): For synchronous permanent magnet motors with sinusoidal electromotive force (EMF) only. This selection is prohibited with ATV61●●●●Y (500 to 690 V). This selection makes the asynchronous motor parameters inaccessible, and the synchronous motor parameters accessible.		
UFq	☐ **[U/F Quad.]** (UFq): Variable torque. For pump and fan applications.		
nLd	☐ **[Energy Sav.]** (nLd): Energy saving. For applications that do not require high dynamics. This type of control is recommended when replacing an ATV38.		

Code	Name/Description	Adjustment range	Factory setting
PFL	❑ **[U/F Profile]** Adjustment of the [U/F Quad.] (UFq) ratio. The parameter can be accessed if [Motor control type] (Ctt) = [U/F Quad.] (UFq). It defines the magnetizing current at zero frequency, as a % of the rated magnetizing current. Magnetizing current 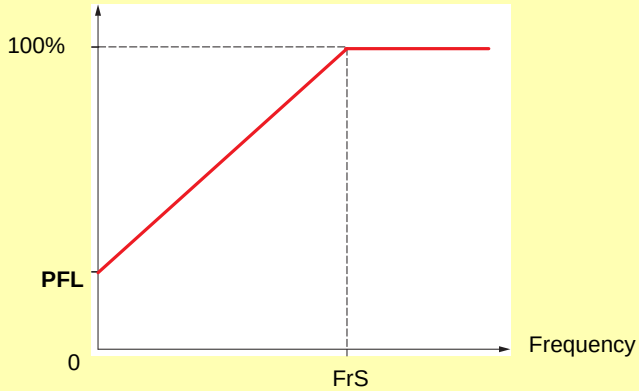 	0 to 100%	20
U0	❑ **[U0]** V/f ratio The parameter can be accessed if [Motor control type] (Ctt) = [V/F 2pts] (UF2) or [V/F 5pts] (UF5) or [U/F Quad.] (UFq).	0 to 800 or 1,000 V according to rating	0
U1	❑ **[U1]** V/F profile setting. The parameter can be accessed if [Motor control type] (Ctt) = [V/F 5pts] (UF5)	0 to 800 or 1,000 V according to rating	0
F1	❑ **[F1]** V/F profile setting. The parameter can be accessed if [Motor control type] (Ctt) = [V/F 5pts] (UF5)	0 to 599 Hz	0
U2	❑ **[U2]** V/F profile setting. The parameter can be accessed if [Motor control type] (Ctt) = [V/F 5pts] (UF5)	0 to 800 or 1,000 V according to rating	0
F2	❑ **[F2]** V/F profile setting. The parameter can be accessed if [Motor control type] (Ctt) = [V/F 5pts] (UF5)	0 to 599 Hz	0
U3	❑ **[U3]** V/F profile setting. The parameter can be accessed if [Motor control type] (Ctt) = [V/F 5pts] (UF5)	0 to 800 or 1,000 V according to rating	0
F3	❑ **[F3]** V/F profile setting. The parameter can be accessed if [Motor control type] (Ctt) = [V/F 5pts] (UF5)	0 to 599 Hz	0

Parameter that can be modified during operation or when stopped.

Code	Name/Description	Adjustment range	Factory setting
U4	❑ **[U4]** V/F profile setting. The parameter can be accessed if [Motor control type] (Ctt) = [V/F 5pts] (UF5)	0 to 800 or 1,000 V according to rating	0
F4	❑ **[F4]** V/F profile setting. The parameter can be accessed if [Motor control type] (Ctt) = [V/F 5pts] (UF5)	0 to 599 Hz	0
U5	❑ **[U5]** V/F profile setting. The parameter can be accessed if [Motor control type] (Ctt) = [V/F 5pts] (UF5)	0 to 800 or 1,000 V according to rating	0
F5	❑ **[F5]** V/F profile setting. The parameter can be accessed if [Motor control type] (Ctt) = [V/F 5pts] (UF5)	0 to 599 Hz	0
UC2 nO YES	❑ **[Vector Control 2pt]** The parameter can be accessed if [Motor control type] (Ctt) is not [Sync. mot.] (SYn). ☐ **[No]** (nO): Function inactive ☐ **[Yes]** (YES): Function active. Used in applications in which the motor rated speed and frequency need to be exceeded in order to optimize operation at constant power, or when the maximum voltage of the motor needs to be limited to a value below the line voltage. The voltage/frequency profile must then be adapted in accordance with the motor's capabilities to operate at maximum voltage UCP and maximum frequency FCP. 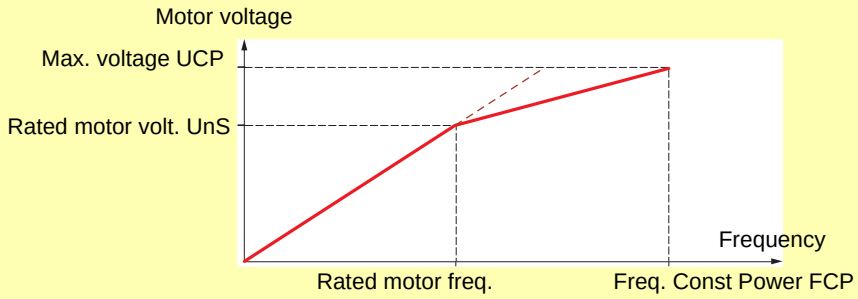 		[No] (nO)
UCP	❑ **[V. constant power]** The parameter can be accessed if [Vector Control 2pt] (UC2) = [Yes] (YES)	According to drive rating	According to drive rating and [Standard mot. freq] (bFr)
FCP	❑ **[Freq. Const Power]** The parameter can be accessed if [Vector Control 2pt] (UC2) = [Yes] (YES)	According to drive rating and [Rated motor freq.] (FrS)	= [Standard mot. freq] (bFr)

Synchronous motor parameters

These parameters can be accessed if [Motor control type] (Ctt) page 69 = [Sync. mot.] (SYn). In this case, the asynchronous motor parameters cannot be accessed.

Code	Name/Description	Adjustment range	Factory setting
nCrS	❑ **[Nominal I sync.]** Rated synchronous motor current given on the nameplate.	0.25 to 1.1 or 1.2 Hz according to rating (1)	According to drive rating
nSPS	❑ **[Nom motor spdsync]** Rated motor speed given on the nameplate. On the integrated display unit: 0 to 9,999 rpm then 10.00 to 60.00 krpm.	0 to 60,000 rpm	According to drive rating
PPnS	❑ **[Pole pairs]** Number of pairs of poles on the synchronous motor.	1 to 50	According to drive rating
PHS	❑ **[Syn. EMF constant]** Synchronous motor EMF constant, in mV per rpm.	0 to 6,553.5	According to drive rating
LdS	❑ **[Autotune L d-axis]** Axis “d” stator inductance in mH. On motors with smooth poles [Autotune L d-axis] (LdS) = [Autotune L q-axis] (LqS) = Stator inductance L.	0 to 655.3	According to drive rating
LqS	❑ **[Autotune L q-axis]** Axis “q” stator inductance in mH. On motors with smooth poles [Autotune L d-axis] (LdS) = [Autotune L q-axis] (LqS) = Stator inductance L.	0 to 655.3	According to drive rating
rSAS	❑ **[Cust. stator R syn]** Cold state stator resistance (per winding) The factory setting is replaced by the result of the auto-tuning operation, if it has been performed. The value can be entered by the user, if he knows it. Value in milliohms (mΩ) up to 75 kW (100 HP), in hundredths of milliohms (mΩ/100) above 75 kW (100 HP). On the integrated display unit: 0 to 9,999 then 10.00 to 65.53 (10,000 to 65,536).	According to drive rating	According to drive rating

(1) In corresponds to the rated drive current indicated in the Installation Manual and on the drive nameplate.

Synchronous motor parameters that can be accessed in [Expert] mode

Code	Name/Description
rSMS	❑ **[R1rS]** Cold state stator resistance (per winding), in read-only mode. This is the drive factory setting or the result of the auto-tuning operation, if it has been performed. Value in milliohms (mΩ) up to 75 kW (100 HP), in hundredths of milliohms (mΩ/100) above 75 kW (100 HP). On the integrated display unit: 0 to 9,999 then 10.00 to 65.53 (10,000 to 65,536).
FrSS	❑ **[Nominal freq sync.]** Motor frequency at rated speed in Hz, calculated by the drive (rated motor frequency), in read-only mode.

Code	Name/Description	Adjustment range	Factory setting
UFr	❑ **[IR compensation]** (1) The parameter can be accessed if [Motor control type] (Ctt) is not [V/F 2pts] (UF2), [V/F 5pts] (UF5) or [U/F Quad.] (UFq). Used to optimize the torque at very low speed (increase [IR compensation] (UFr) if the torque is insufficient). Check that the [IR compensation] (UFr) value is not too high when the motor is warm (risk of instability).	25 to 200%	100%
SLP	❑ **[Slip compensation]** (1) The parameter can be accessed if [Motor control type] (Ctt) is not [V/F 2pts] (UF2), [V/F 5pts] (UF5), [U/F Quad.] (UFq) or [Sync. mot.] (SYn). Adjusts the slip compensation around the value set by the rated motor speed. The speeds given on motor nameplates are not necessarily exact. • If slip setting < actual slip: The motor is not rotating at the correct speed in steady state, but at a speed lower than the reference. • If slip setting > actual slip: The motor is overcompensated and the speed is unstable.	0 to 300%	100%

(1) The parameter can also be accessed in the [1.3 SETTINGS] (SEt-) menu.

Parameter that can be modified during operation or when stopped.

Parameter can be accessed in [Expert] mode.

Code	Name/Description
Prt	❑ **[Power Ident]** Parameter reserved for Schneider Electric product support. **Do not modify.** To modify this parameter with the integrated terminal, press and hold down the “ENT” key for 2 s.

Asynchronous motor parameters that can be accessed in [Expert] mode

These parameters can be accessed if [Motor control type] (Ctt) page 69 is not [Sync. mot.] (SYn).
These include:

- Parameters calculated by the drive during auto-tuning, in read-only mode. For example, R1r, calculated cold stator resistance.
- The possibility of replacing some of these calculated parameters by other values, if necessary. For example, R1w, measured cold stator resistance.

When a parameter Xyw is modified by the user, the drive uses it in place of the calculated parameter Xyr.

If auto-tuning is performed or if one of the motor parameters on which auto-tuning depends is modified ([Rated motor volt.] (UnS), [Rated motor freq.] (FrS), [Rated mot. current] (nCr), [Rated motor speed] (nSP), [Rated motor power] (nPr)), parameters Xyw return to their factory settings.

Code	Name/Description
rSM	❑ **[Stator R measured]** Cold stator resistance, calculated by the drive, in read-only mode. Value in milliohms (mΩ) up to 75 kW (100 HP), in hundredths of milliohms (mΩ/100) above 75 kW (100 HP).
IdM	❑ **[Idr]** Magnetizing current in A, calculated by the drive, in read-only mode.
LFM	❑ **[Lfr]** Leakage inductance in mH, calculated by the drive, in read-only mode.
trM	❑ **[T2r]** Rotor time constant in mS, calculated by the drive, in read-only mode.
nSL	❑ **[Nominal motor slip]** Rated slip in Hz, calculated by the drive, in read-only mode. To modify the rated slip, modify the [Rated motor speed] (nSP) (page 66).
PPn	❑ **[Pr]** Number of pairs of poles, calculated by the drive, in read-only mode.
rSA	❑ **[R1w]** Cold state stator resistance (per winding), modifiable value. In milliohms (mΩ) up to 75 kW (100 HP), in hundredths of milliohms (mΩ/100) above 75 kW (100 HP). On the integrated display unit: 0 to 9,999 then 10.00 to 65.53 (10,000 to 65,536).
IdA	❑ **[Idw]** Magnetizing current in A, modifiable value.
LFA	❑ **[Lfw]** Leakage inductance in mH, modifiable value.
trA	❑ **[T2w]** Rotor time constant in mS, modifiable value.

Selecting the encoder

Follow the recommendations in the catalog and the Installation Manual.

Code	Name/Description	Adjustment range	Factory setting
EnS	❑ **[Encoder type]** To be configured in accordance with the type of card and encoder used (1). nO ☐ **[----]** (nO): Card missing. AAbb ☐ **[AABB]** (AAbb): For signals A, A-, B, B-. Ab ☐ **[AB]** (Ab): For signals A, B. A ☐ **[A]** (A): For signal A. Value cannot be accessed if [Encoder usage] (EnU) page 76 = [Spd fdk reg.] (rEG).		[AABB] (AAbb)
PGI	❑ **[Number of pulses]** Number of pulses per encoder revolution. The parameter can be accessed if an encoder card has been inserted (1).	100 to 5,000	1,024

(1) The encoder parameters can only be accessed if the encoder card has been inserted, and the available selections will depend on the type of encoder card used. The encoder configuration can also be accessed in the [1.5- INPUTS / OUTPUTS CFG] (I/O) menu.

Encoder check procedure

1. Set up in open-loop mode, following the recommendations on page 9.
2. Set [Encoder usage] (EnU) = [No] (nO).
3. Set [Encoder type] (EnS) and [Number of pulses] (PGI) accordingly for the encoder used.
4. Set [Encoder check] (EnC) = [Yes] (YES)
5. Check that the rotation of the motor is safe.
6. Set the motor rotating at stabilized speed ≈ 15% of the rated speed for at least 3 seconds, and use the [1.2-MONITORING] (SUP-) menu to monitor its behavior.
7. If it trips on an [Encoder fault] (EnF), [Encoder check] (EnC) returns to [No] (nO).
   - Check [Number of pulses] (PGI) and [Encoder type] (EnS).
   - Check that the mechanical and electrical operation of the encoder, its power supply and connections are all correct.
   - Reverse the direction of rotation of the motor ([Output Ph rotation] (PHr) parameter page 68) or the encoder signals.
8. Repeat the operations from 5 onwards until [Encoder check] (EnC) changes to [Done] (dOnE).

Code	Name/Description	Adjustment range	Factory setting
EnC	❑ **[Encoder check]** Encoder feedback check See the procedure below. The parameter can be accessed if an encoder card has been inserted (1). nO ☐ **[Not done]** (nO) Check not performed. YES ☐ **[Yes]** (YES): Activates monitoring of the encoder. dOnE ☐ **[Done]** (dOnE): Check performed successfully. The check procedure checks: - The direction of rotation of the encoder/motor - The presence of signals (wiring continuity) - The number of pulses/revolution If a fault is detected, the drive locks in [Encoder fault] (EnF) fault mode.		[Not done] (nO)
EnU	❑ **[Encoder usage]** The parameter can be accessed if an encoder card has been inserted (1). nO ☐ **[No]** (nO): Function inactive SEC ☐ **[Fdbk monit.]** (SEC): The encoder provides speed feedback for monitoring only. rEG ☐ **[Spd fdk reg.]** (rEG): The encoder provides speed feedback for regulation and monitoring. If [Motor control type] (Ctt) = [SVC U] (UUC) the encoder operates in speed feedback mode and enables static correction of the speed to be performed. This configuration is not accessible for other [Motor control type] (Ctt) values. PGr ☐ **[Speed ref.]** (PGr): The encoder provides a reference.		[No] (nO)

(1) The encoder parameters can only be accessed if the encoder card has been inserted, and the available selections will depend on the type of encoder card used. The encoder configuration can also be accessed in the [1.5- INPUTS / OUTPUTS CFG] (I/O) menu.

Code	Name/Description	Adjustment range	Factory setting
OFI nO YES	❑ **[Sinus filter]**		[No] (nO)

☐ **[No]** (nO): No sinus filter

☐ **[Yes]** (YES): Use of a sinus filter, to limit overvoltages on the motor and reduce the ground fault leakage current.

- [Sinus filter] (OFI) is forced to [No] (nO) for ATV61●075●● ratings.
- [Sinus filter] (OFI) is forced to [No] (nO) for ATV61●●●Y if [Motor control type] (Ctt) page 69 is not set to [U/F 2pts] (UF2) or [U/F 5pts] (UF5).

CAUTION

If [Sinus filter] (OFI) = [Yes] (YES), [Max frequency] (tFr) **must not exceed 100 Hz and** [Motor control type] (Ctt) page 69 **must not be:**

- [Sync. mot.] (SYn), irrespective of the drive rating
- [SVC V] (UUC) or [Energy Sav.] (nLd) at and above 55 kW (75 HP) for ATV61H●●●M3X and at and above 90 kW (120 HP) for ATV61H●●●N4

Failure to follow this instruction can result in equipment damage.

SFr ( )	❑ **[Switching freq.]** (1)	According to rating	According to rating

Switching frequency setting.

☞ **Note:** In the event of excessive temperature rise, the drive will automatically reduce the switching frequency and reset it once the temperature returns to normal.

Adjustment range: It can vary between 1 and 16 kHz, but the minimum and maximum values, as well as the factory setting, can be limited in accordance with the type of drive (ATV61H or W), the rating (power and voltage) and the configuration of the [Sinus filter] (OFI) parameter above and [Motor surge limit.] (SUL) parameter page 78.

Adjustment with drive running:
- If the initial value is less than 2 kHz, it is not possible to increase it above 1.9 kHz while running.
- If the initial value is greater than or equal to 2 kHz, a minimum of 2 kHz must be maintained while running.

Adjustment with the drive stopped: No restrictions.

CAUTION

On ATV61●075N4 to U40N4 drives, if the RFI filters are disconnected (operation on an IT system), the switching frequency of the drive must not exceed 4 kHz.
Failure to follow this instruction can result in equipment damage.

CLI ( )	❑ **[Current Limitation]** (1)	0 to 1.1 or 1.2 In (2) according to rating	1.1 or 1.2 In (2) according to rating

Used to limit the motor current.

☞ **Note:** If the setting is less than 0.25 In, the drive may lock in [Output Phase Loss] (OPF) fault mode if this has been enabled (see page 196). If it is less than the no-load motor current, the limitation no longer has any effect.

CAUTION

Check that the motor will withstand this current, particularly in the case of permanent magnet synchronous motors, which are susceptible to demagnetization.
Failure to follow this instruction can result in equipment damage.

(1) The parameter can also be accessed in the [1.3 SETTINGS] (SEt-) menu.
(2) In corresponds to the rated drive current indicated in the Installation Manual and on the drive nameplate.

( ) Parameter that can be modified during operation or when stopped.

Code	Name/Description	Adjustment range	Factory setting
nrd nO YES	❑ **[Noise reduction]** ☐ **[No]** (nO): Fixed frequency. Factory setting at and above ATV61HD55M3X, ATV61HD90N4 and ATV61HC11Y. ☐ **[Yes]** (YES): Frequency with random modulation. Factory setting up to ATV61HD45M3X, ATV61HD75N4 and ATV61HD90Y. Random frequency modulation prevents any resonance, which may occur at a fixed frequency.		According to rating
SUL nO YES	❑ **[Motor surge limit.]** This function limits motor overvoltages and is useful in the following applications: - NEMA motors - Spindle motors - Rewound motors ☐ **[No]** (nO): Function inactive ☐ **[Yes]** (YES): Function active This parameter is forced to [No] (nO) if a sinus filter is used. This parameter can remain = [No] (nO) for 230/400 V motors used at 230 V, or if the length of cable between the drive and the motor does not exceed: - 4 m with unshielded cables - 10 m with shielded cables		[No] (nO)
SOP	❑ **[Volt surge limit. opt]** Optimization parameter for transient overvoltages at the motor terminals. Accessible if [Motor surge limit.] (SUL) = [Yes] (YES). Set to 6, 8, or 10 (µs), according to the following table.		10 (µs)

The value of the “SOP” parameter corresponds to the attenuation time of the cable used. It is defined to prevent the superimposition of voltage wave reflections resulting from long cable lengths. It limits overvoltages to twice the DC bus rated voltage.
The tables on the following page give examples of correspondence between the “SOP” parameter and the length of the cable between the drive and the motor. For longer cable lengths, a sinus filter or a dV/dt protection filter must be used.

- For motors in parallel, the sum of all the cable lengths must be taken into consideration. Compare the length given in the line corresponding to the power for one motor with that corresponding to the total power, and select the shorter length. Example:
  Two 7.5 kW (10 HP) motors – take the lengths on the 15 kW (20 HP) line, which are shorter than those on the 7.5 kW (10 HP) line, and divide by the number of motors to obtain the length per motor (with unshielded “GORSE” cable and SOP = 6, the result is 40/2 = 20 m maximum for each 7.5 kW (10 HP) motor).

In special cases (for example, different types of cable, different motor powers in parallel, different cable lengths in parallel, etc.), we recommend using an oscilloscope to check the overvoltage values obtained at the motor terminals.

To retain the overall drive performance, do not increase the SOP value unnecessarily.

Tables giving the correspondence between the SOP parameter and the cable length, for 400 V line supply

Altivar 61	Motor		Cable cross-section		Maximum cable length in meters					
reference	Power				Unshielded “GORSE” cable Type H07 RN-F 4Gxx			Shielded “GORSE” cable Type GVCSTV-LS/LH		
	kW	HP	in mm^2	AWG	**SOP = 10**	**SOP = 8**	**SOP = 6**	**SOP = 10**	**SOP = 8**	**SOP = 6**
ATV61H075N4	0.75	1	1.5	14	100 m	70 m	45 m	105 m	85 m	65 m
ATV61HU15N4	1.5	2	1.5	14	100 m	70 m	45 m	105 m	85 m	65 m
ATV61HU22N4	2.2	3	1.5	14	110 m	65 m	45 m	105 m	85 m	65 m
ATV61HU30N4	3	-	1.5	14	110 m	65 m	45 m	105 m	85 m	65 m
ATV61HU40N4	4	5	1.5	14	110 m	65 m	45 m	105 m	85 m	65 m
ATV61HU55N4	5.5	7.5	2.5	14	120 m	65 m	45 m	105 m	85 m	65 m
ATV61HU75N4	7.5	10	2.5	14	120 m	65 m	45 m	105 m	85 m	65 m
ATV61HD11N4	11	15	6	10	115 m	60 m	45 m	100 m	75 m	55 m
ATV61HD15N4	15	20	10	8	105 m	60 m	40 m	100 m	70 m	50 m
ATV61HD18N4	18.5	25	10	8	115 m	60 m	35 m	150 m	75 m	50 m
ATV61HD22N4	22	30	16	6	150 m	60 m	40 m	150 m	70 m	50 m
ATV61HD30N4	30	40	25	4	150 m	55 m	35 m	150 m	70 m	50 m
ATV61HD37N4	37	50	35	5	200 m	65 m	50 m	150 m	70 m	50 m
ATV61HD45N4	45	60	50	0	200 m	55 m	30 m	150 m	60 m	40 m
ATV61HD55N4	55	75	70	2/0	200 m	50 m	25 m	150 m	55 m	30 m
ATV61HD75N4	75	100	95	4/0	200 m	45 m	25 m	150 m	55 m	30 m

Altivar 61	Motor		Cable cross-section		Maximum cable length in meters					
reference	Power				Shielded “BELDEN” cable Type 2950x			Shielded “PROTOFLEX” cable Type EMV 2YSLCY-J		
	kW	HP	in mm^2	AWG	**SOP = 10**	**SOP = 8**	**SOP = 6**	**SOP = 10**	**SOP = 8**	**SOP = 6**
ATV61H075N4	0.75	1	1.5	14	50 m	40 m	30 m			
ATV61HU15N4	1.5	2	1.5	14	50 m	40 m	30 m			
ATV61HU22N4	2.2	3	1.5	14	50 m	40 m	30 m			
ATV61HU30N4	3	-	1.5	14	50 m	40 m	30 m			
ATV61HU40N4	4	5	1.5	14	50 m	40 m	30 m			
ATV61HU55N4	5.5	7.5	2.5	14	50 m	40 m	30 m			
ATV61HU75N4	7.5	10	2.5	14	50 m	40 m	30 m			
ATV61HD11N4	11	15	6	10	50 m	40 m	30 m			
ATV61HD15N4	15	20	10	8	50 m	40 m	30 m			
ATV61HD18N4	18.5	25	10	8	50 m	40 m	30 m			
ATV61HD22N4	22	30	16	6				75 m	40 m	25 m
ATV61HD30N4	30	40	25	4				75 m	40 m	25 m
ATV61HD37N4	37	50	35	5				75 m	40 m	25 m
ATV61HD45N4	45	60	50	0				75 m	40 m	25 m
ATV61HD55N4	55	75	70	2/0				75 m	30 m	15 m
ATV61HD75N4	75	100	95	4/0				75 m	30 m	15 m

Note: For 230/400 V used at 230 V, the [Motor surge limit.] (SUL) parameter can remain = [No] (nO).

Code	Name/Description	Adjustment range	Factory setting
Ubr	❑ **[Braking level]** DC bus voltage threshold above which the braking transistor cuts in to limit this voltage. ATV61●●●●M3●: factory setting 395 V. ATV61●●●●N4: factory setting 785 V. ATV61●●●●S6Y: factory setting 980 V. ATV61●●●●Y: factory setting 1127 V or 1080 V according to rating. The adjustment range depends on the voltage rating of the drive and the [Mains voltage] (UrES) parameter, page 200.		According to drive voltage rating
bbA nO YES	❑ **[Braking balance]** ☐ **[No]** (nO): Function inactive ☐ **[Yes]** (YES): Function active, to be used on drives connected in parallel via their DC bus. Used to balance the braking power between the drives. The [Braking level] (Ubr) parameter, page 80, must be set to the same value on the various drives. The value [Yes] (YES) is only possible if [Dec ramp adapt.] (brA) = [No] (nO) (see page 134).		[No] (nO)

(1) The parameter can also be accessed in the [1.3 SETTINGS] (SEt-) menu.

Parameter that can be modified during operation or when stopped.

With graphic display terminal:

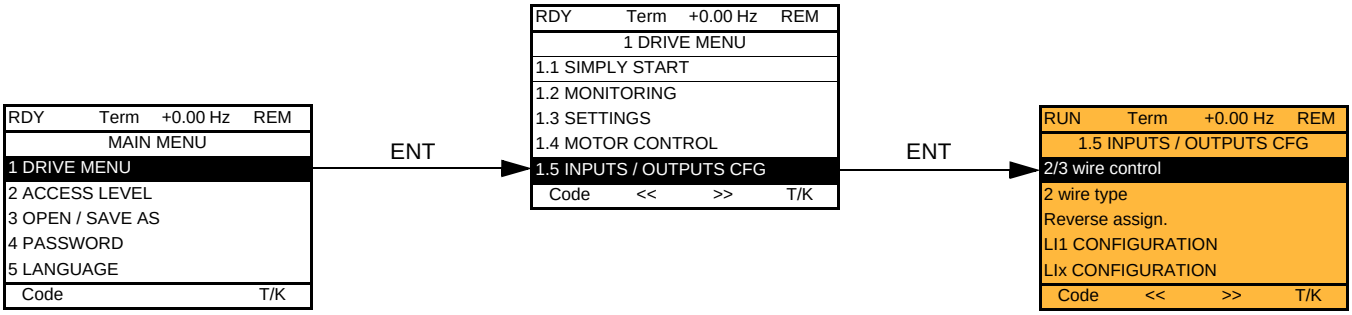

With integrated display terminal:

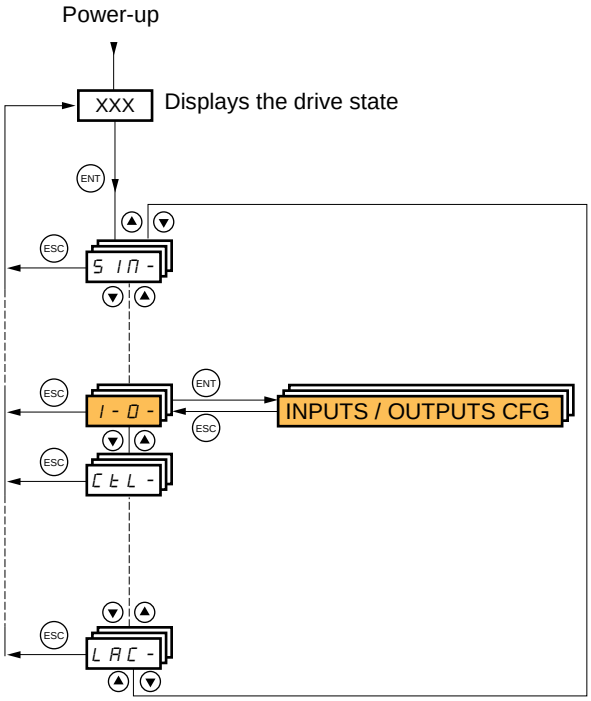

The parameters in the [1.5 INPUTS / OUTPUTS CFG] (I-O-) menu can only be modified when the drive is stopped and no run command is present.

Code	Name/Description	Adjustment range	Factory setting
tCC	❑ **[2/3 wire control]**		[2 wire] (2C)
2C	☐ **[2 wire]** (2C)		
3C	☐ **[3 wire]** (3C)		

2-wire control: This is the input state (0 or 1) or edge (0 to 1 or 1 to 0), which controls running or stopping.

Example of “source” wiring:

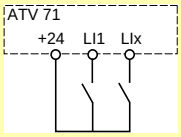

LI1: forward
LIx: reverse

3-wire control (pulse control): A “forward” or “reverse” pulse is sufficient to command starting, a “stop” pulse is sufficient to command stopping.

Example of “source” wiring:

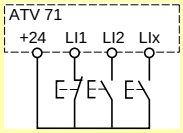

LI1: stop
LI2: forward
LIx: reverse

WARNING

UNINTENDED EQUIPMENT OPERATION

To change the assignment of [2/3 wire control] (tCC) press the “ENT” key for 2 s.
It causes the following functions to return to factory setting: [2 wire type] (tCt) and [Reverse assign.] (rrS) below, and all functions which assign logic inputs and analog inputs.
The macro configuration selected will also be reset if it has been customized (loss of custom settings).
It is advisable to configure this parameter before configuring the [1.6 COMMAND] (CtL-) and [1.7 APPLICATION FUNCT.] (FUn-) menus.
Check that this change is compatible with the wiring diagram used.
Failure to follow these instructions can result in death or serious injury.

tCt	❑ **[2 wire type]**		[Transition] (trn)
LEL	☐ **[Level]** (LEL): State 0 or 1 is taken into account for run (1) or stop (0).		
trn	☐ **[Transition]** (trn): A change of state (transition or edge) is necessary to initiate operation, in order to prevent accidental restarts after a break in the power supply.		
PFO	☐ **[Fwd priority]** (PFO): State 0 or 1 is taken into account for run or stop, but the “forward” input always takes priority over the “reverse” input.		
rrS	❑ **[Reverse assign.]**		[No] (nO)
nO	☐ **[No]** (nO): Not assigned		
LI1	☐ **[LI1]** (LI1) to **[LI6]** (LI6)		
-	☐ **[LI7]** (LI7) to **[LI10]** (LI10): If VW3A3201 logic I/O card has been inserted		
-	☐ **[LI11]** (LI11) to **[LI14]** (LI14): If VW3A3202 extended I/O card has been inserted		
C101	☐ **[C101]** (C101) to **[C115]** (C115): With integrated Modbus in [I/O profile] (IO)		
-	☐ **[C201]** (C201) to **[C215]** (C215): With integrated CANopen in [I/O profile] (IO)		
-	☐ **[C301]** (C301) to **[C315]** (C315): With a communication card in [I/O profile] (IO)		
-	☐ **[C401]** (C401) to **[C415]** (C415): With a Controller Inside card in [I/O profile] (IO)		
Cd00	☐ **[CD00]** (Cd00) to **[CD13]** (Cd13): In [I/O profile] (IO) can be switched with possible logic inputs		
-	☐ **[CD14]** (Cd14) to **[CD15]** (Cd15): In [I/O profile] (IO) can be switched without logic inputs		
	Assignment of the reverse direction command.		

Code	Name/Description	Adjustment range	Factory setting
L I -	**[LI1 CONFIGURATION]**		
L IA	❑ **[LI1 assignment]** Read-only parameter, cannot be configured. It displays all the functions that are assigned to input LI1 in order to check multiple assignments.		
L Id	❑ **[LI1 On Delay]** This parameter is used to take account of the change of the logic input to state 1 with a delay that can be adjusted between 0 and 200 milliseconds, in order to filter out possible interference. The change to state 0 is taken into account without delay. **WARNING** **UNINTENDED EQUIPMENT OPERATION** Check that the delay set does not pose a risk or lead to undesired operation. The relative order in which these inputs are taken into account may be modified according to the delay values of the various logic inputs, and thus lead to unintended operation. **Failure to follow these instructions can result in death or serious injury.**	0 to 200 ms	0
L - -	**[LIx CONFIGURATION]**		
	All the logic inputs available on the drive are processed as in the example for LI1 above, up to LI6, LI10 or LI14, depending on whether or not option cards have been inserted.		

Configuration of analog inputs and Pulse input

The minimum and maximum input values (in volts, mA, etc.) are converted to% in order to adapt the references to the application.

Minimum and maximum input values:

The minimum value corresponds to a reference of 0% and the maximum value to a reference of 100%. The minimum value may be greater than the maximum value:

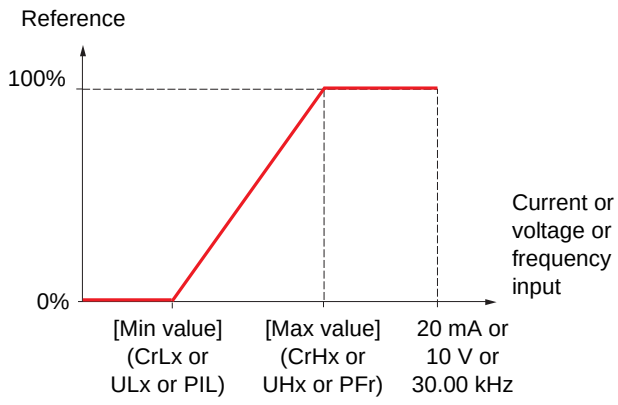

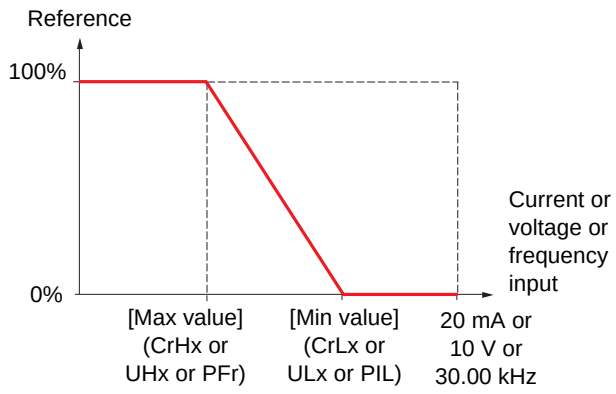

For +/- bidirectional inputs, the min. and max. are relative to the absolute value, for example, +/- 2 to 8 V.

Negative min. value of Pulse input:

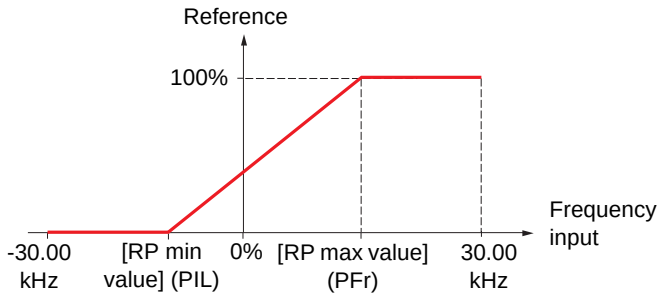

Range (output values): For analog inputs only

This parameter is used to configure the reference range to [0% → 100%] or [-100% → +100%] in order to obtain a bidirectional output from a unidirectional input.

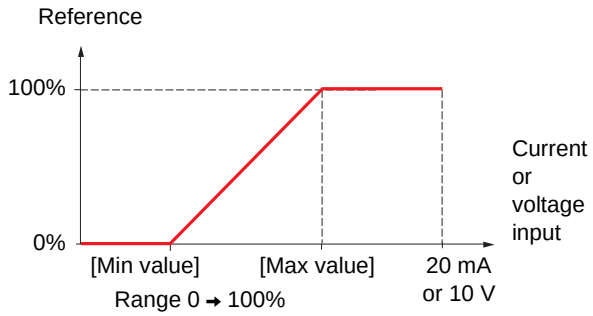

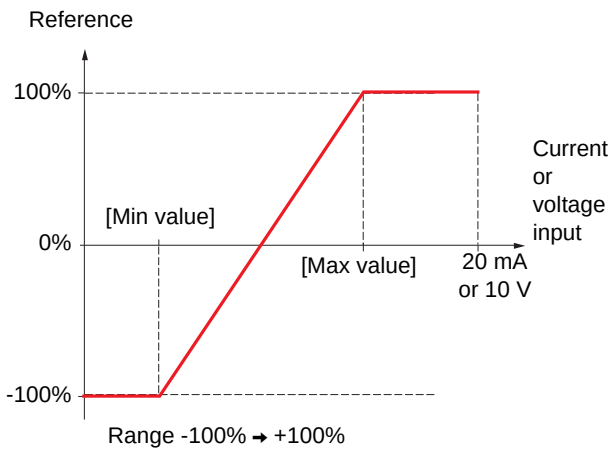

Code	Name/Description	Adjustment range	Factory setting
bSP	❑ **[Reference template]**		[Standard] (bSd)
bSd	☐ **[Standard]** (bSd)		

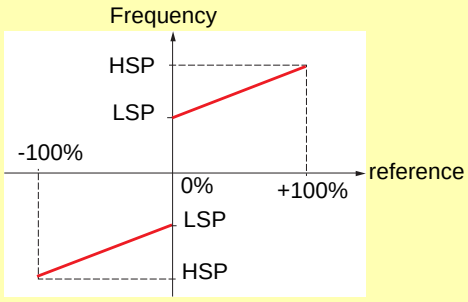

At zero reference the frequency = LSP

bLS	☐ **[Pedestal]** (bLS)		

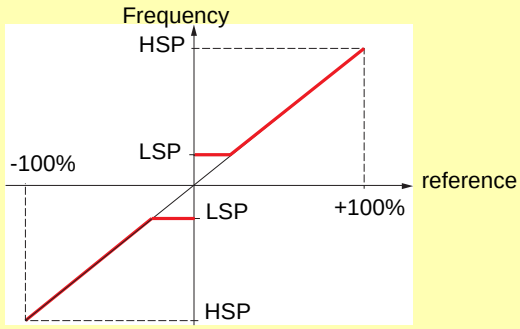

At reference = 0 to LSP the frequency = LSP

bnS	☐ **[Deadband]** (bnS)		

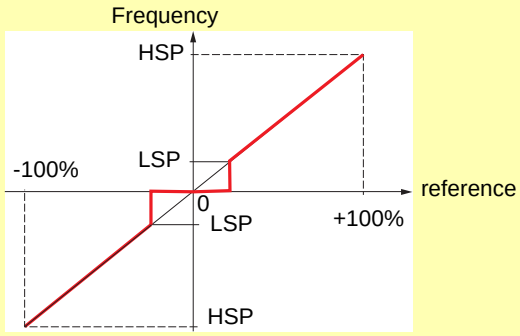

At reference = 0 to LSP the frequency = 0

bnS0	☐ **[Deadband 0]** (bnS0)		

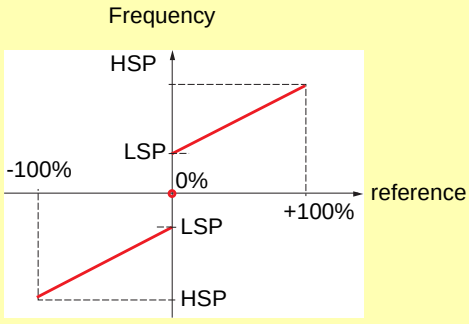

This operation is the same as [Standard] (bSd), except that in the following cases at zero reference, the frequency = 0:
• The signal is less than [Min value], which is greater than 0 (example 1 V on a 2 - 10 V input)
• The signal is greater than [Min value], which is greater than [Max value] (example 11 V on a 10 - 0 V input).

If the input range is configured as “bidirectional”, operation remains identical to [Standard] (bSd).

This parameter defines how the speed reference is taken into account, for analog inputs and Pulse input only. In the case of the PID regulator, this is the PID output reference.
The limits are set by the [Low speed] (LSP) and [High speed] (HSP) parameters, page 38

Delinearization: For analog inputs only

The input can be delinearized by configuring an intermediate point on the input/output curve of this input:

For range 0 → 100%

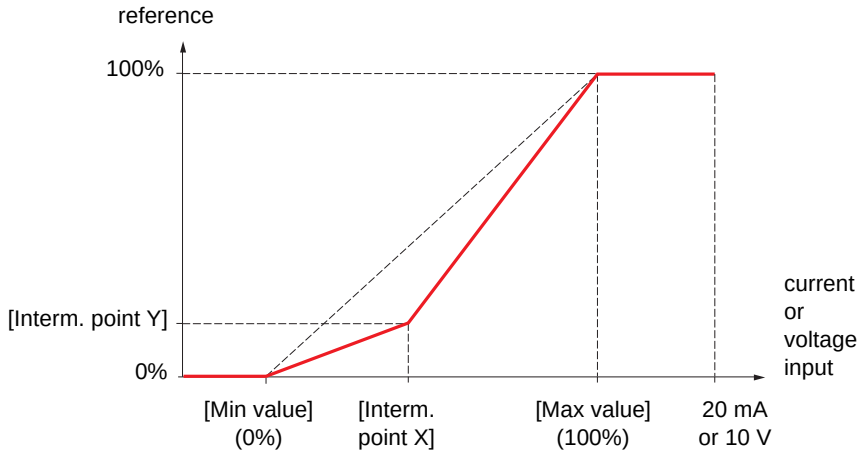

Note: For [Interm. point X], 0% corresponds to [Min value] and 100% to [Max value]

For range -100% → 100%

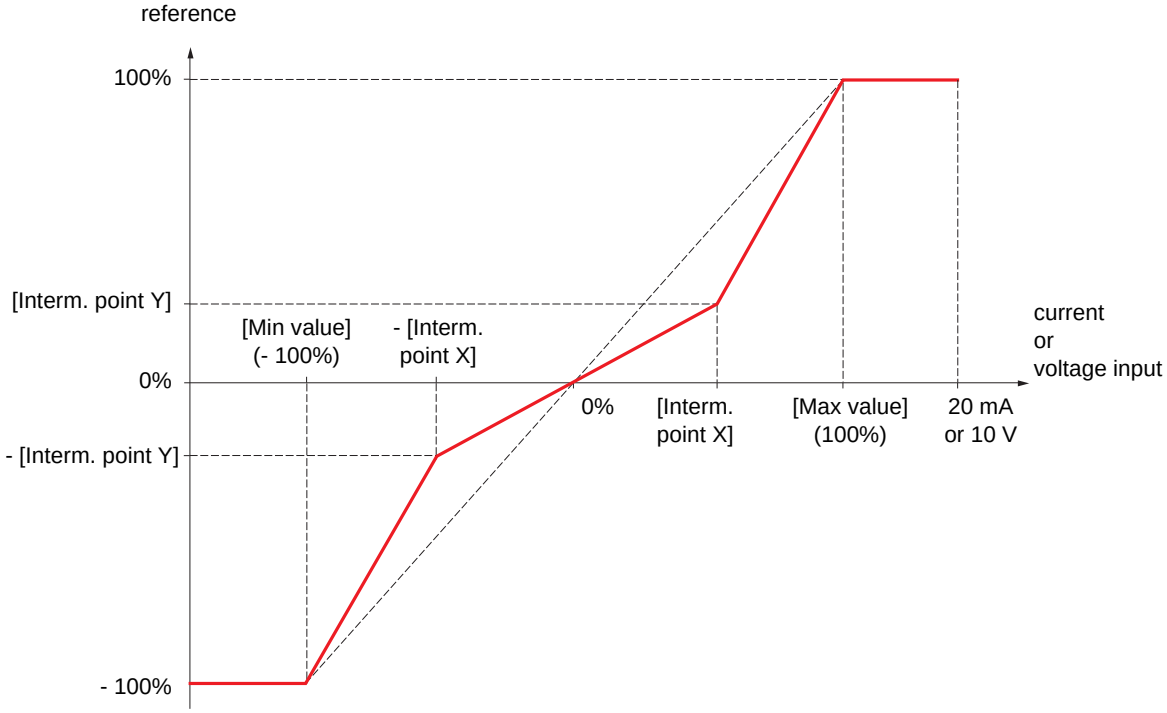

Code	Name/Description	Adjustment range	Factory setting
AI1-	**[AI1 CONFIGURATION]**		
AI1A	**[AI1 assignment]** Read-only parameter, cannot be configured. It displays all the functions associated with input AI1 in order to check, for example, for compatibility problems.		
AI1t 10U n10U	**[AI1 Type]** ☐ **[Voltage]** (10U): Positive voltage input (negative values are considered as zero: the input is unidirectional). ☐ **[Voltage +/-]** (n10U): Positive and negative voltage input (the input is bidirectional).		[Voltage] (10U)
UIL1	**[AI1 min value]**	0 to 10.0 V	0 V
UIH1	**[AI1 max value]**	0 to 10.0 V	10.0 V
AI1F	**[AI1 filter]** Interference filtering.	0 to 10.00 s	0 s
AI1E	**[AI1 Interm. point X]** Input delinearization point coordinate. • 0% corresponds to [AI1 min value] (UIL1). • 100% corresponds to [AI1 max value] (UIH1).	0 to 100%	0%
AI1S	**[AI1 Interm. point Y]** Output delinearization point coordinate (frequency reference).	0 to 100%	0%

Code	Name/Description	Adjustment range	Factory setting
A I 2 -	**[AI2 CONFIGURATION]**		
A I 2 A	**[AI2 assignment]** Read-only parameter, cannot be configured. It displays all the functions associated with input AI2 in order to check, for example, for compatibility problems.		
A I 2 t 1 0 U 0 A	**[AI2 Type]** ☐ **[Voltage]** (10U): Voltage input ☐ **[Current]** (0 A): Current input		[Current] (0 A)
C r L 2	**[AI2 min. value]** The parameter can be accessed if [AI2 Type] (AI2t) = [Current] (0 A)	0 to 20.0 mA	0 mA
U I L 2	**[AI2 min. value]** The parameter can be accessed if [AI2 Type] (AI2t) = [Voltage] (10U)	0 to 10.0 V	0 V
C r H 2	**[AI2 max. value]** The parameter can be accessed if [AI2 Type] (AI2t) = [Current] (0 A)	0 to 20.0 mA	20.0 mA
U I H 2	**[AI2 max. value]** The parameter can be accessed if [AI2 Type] (AI2t) = [Voltage] (10U)	0 to 10.0 V	10.0 V
A I 2 F	**[AI2 filter]** Interference filtering.	0 to 10.00 s	0 s
A I 2 L P O S n E G	**[AI2 range]** ☐ **[0 – 100%]** (POS): Unidirectional input ☐ **[+/- 100%]** (nEG): Bidirectional input Example: On a 0/10 V input - 0 V corresponds to reference -100% - 5 V corresponds to reference 0% - 10 V corresponds to reference +100%		[0 – 100%] (POS)
A I 2 E	**[AI2 Interm. point X]** Input delinearization point coordinate. • 0% corresponds to [Min value] if the range is 0 → 100%. • 0% corresponds to $\frac{[\text{Max value}] + [\text{Min value}]}{2}$ if the range is -100% → +100%. • 100% corresponds to [Max value].	0 to 100%	0%
A I 2 S	**[AI2 Interm. point Y]** Output delinearization point coordinate (frequency reference).	0 to 100%	0%

Code	Name/Description	Adjustment range	Factory setting
AI3-	**[AI3 CONFIGURATION]** Can be accessed if a VW3A3202 option card has been inserted		
AI3A	**[AI3 assignment]** Read-only parameter, cannot be configured. It displays all the functions associated with input AI3 in order to check, for example, for compatibility problems.		
AI3t OA	**[AI3 Type]** Read-only parameter, cannot be configured. ☐ **[Current]** (0 A): Current input		[Current] (0 A)
CrL3	**[AI3 min. value]**	0 to 20.0 mA	0 mA
CrH3	**[AI3 max. value]**	0 to 20.0 mA	20.0 mA
AI3F	**[AI3 filter]** Interference filtering.	0 to 10.00 s	0 s
AI3L POS nEG	**[AI3 range]** ☐ **[0 – 100%]** (POS): Unidirectional input ☐ **[+/- 100%]** (nEG): Bidirectional input Example: On a 4 – 20 mA input - 4 mA corresponds to reference -100% - 12 mA corresponds to reference 0% - 20 mA corresponds to reference +100% Since AI3 is, in physical terms, a bidirectional input, the [+/- 100%] (nEG) configuration must only be used if the signal applied is unidirectional. A bidirectional signal is not compatible with a bidirectional configuration.		[0 – 100%] (POS)
AI3E	**[AI3 Interm. point X]** Input delinearization point coordinate. • 0% corresponds to [Min value] (CrL3) if the range is 0 → 100%. • 0% corresponds to $\frac{\text{[AI3 max. value] (CrH3)} - \text{[AI3 min. value] (CrL3)}}{2}$ if the range is -100% → +100%. • 100% corresponds to [AI3 max. value] (CrH3).	0 to 100%	0%
AI3S	**[AI3 Interm. point Y]** Output delinearization point coordinate (frequency reference).	0 to 100%	0%

Code	Name/Description	Adjustment range	Factory setting
AI4-	**[AI4 CONFIGURATION]** Can be accessed if a VW3A3202 option card has been inserted		
AI4A	**[AI4 assignment]** Read-only parameter, cannot be configured. It displays all the functions associated with input AI4 in order to check, for example, for compatibility problems.		
AI4t 10U 0A	**[AI4 Type]** ☐ **[Voltage]** (10U): Voltage input ☐ **[Current]** (0 A): Current input		[Voltage] (10U)
CrL4	**[AI4 min value]** The parameter can be accessed if [AI4 Type] (AI4t) = [Current] (0 A)	0 to 20.0 mA	0 mA
UIL4	**[AI4 min value]** The parameter can be accessed if [AI4 Type] (AI4t) = [Voltage] (10U)	0 to 10.0 V	0 V
CrH4	**[AI4 max value]** The parameter can be accessed if [AI4 Type] (AI4t) = [Current] (0 A)	0 to 20.0 mA	20.0 mA
UIH4	**[AI4 max value]** The parameter can be accessed if [AI4 Type] (AI4t) = [Voltage] (10U)	0 to 10.0 V	10.0 V
AI4F	**[AI4 filter]** Interference filtering.	0 to 10.00 s	0 s
AI4L POS nEG	**[AI4 range]** ☐ **[0 – 100%]** (POS): Unidirectional input ☐ **[+/- 100%]** (nEG): Bidirectional input Example: On a 0/10 V input - 0 V corresponds to reference -100% - 5 V corresponds to reference 0% - 10 V corresponds to reference +100%		[0 – 100%] (POS)
AI4E	**[AI4 Interm.point X]** Input delinearization point coordinate. • 0% corresponds to [Min value] if the range is 0 → 100%. • 0% corresponds to $\frac{[\text{Max value}] + [\text{Min value}]}{2}$ if the range is -100% → + 100%. • 100% corresponds to [Max value].	0 to 100%	0%
AI4S	**[AI4 Interm.point Y]** Output delinearization point coordinate (frequency reference).	0 to 100%	0%

Code	Name/Description	Adjustment range	Factory setting
AUI-	**[VIRTUAL AI1]**		
AIC1	**[AI net. channel]**		[No] (nO)

Virtual input.
This parameter can also be accessed in the [PID REGULATOR] (PId-) submenu, page 153.

- nO **[Non]** (nO): Not assigned (in this case, the virtual input does not appear in the analog input assignment parameters for the functions)
- Mdb **[Modbus]** (Mdb): Integrated Modbus
- CAn **[CANopen]** (CAn): Integrated CANopen
- nEt **[Com. card]** (nEt): Communication card (if inserted)
- APP **[C.Insid. card]** (APP): Controller Inside card (if inserted)

Scale: The value 8192 transmitted by this input is equivalent to 10 V on a 10 V input.

WARNING

UNINTENDED EQUIPMENT OPERATION

If the equipment switches to forced local mode (see page 218), the virtual input remains frozen at the last value transmitted.
Do not use the virtual input and forced local mode in the same configuration.
Failure to follow this instruction can result in death or serious injury.

Code	Name/Description	Adjustment range	Factory setting
PLI-	**[RP CONFIGURATION]** Can be accessed if a VW3A3202 option card has been inserted		
PIA	**[RP assignment]** Read-only parameter, cannot be configured. It displays all the functions associated with the Pulse In input in order to check, for example, for compatibility problems.		
PIL	**[RP min value]** Frequency corresponding to the minimum speed	- 30.00 to 30.00 kHz	0
PFr	**[RP max value]** Frequency corresponding to the maximum speed	0 to 30.00 kHz	30.00 kHz
PFI	**[RP filter]** Interference filtering.	0 to 1,000 ms	0

Configuration of the encoder input serving as a reference, with a frequency generator

This reference is not signed, therefore the directions of operation must be given via the control channel (logic inputs, for example).

Minimum and maximum values (input values):

The minimum value corresponds to a minimum reference of 0% and the maximum value to a maximum reference of 100%. The minimum value may be greater than the maximum value. It may also be negative.

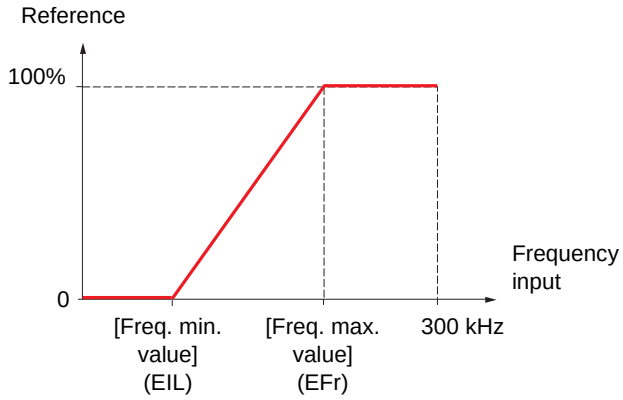

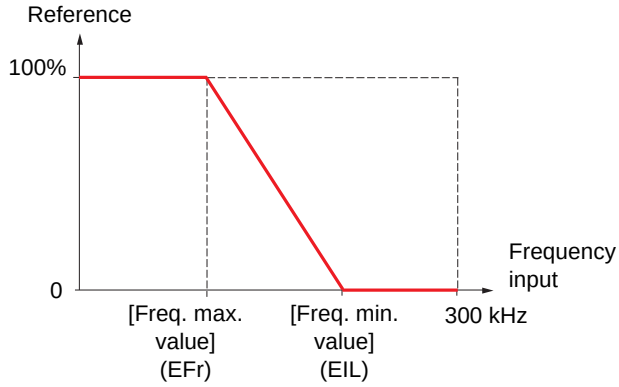

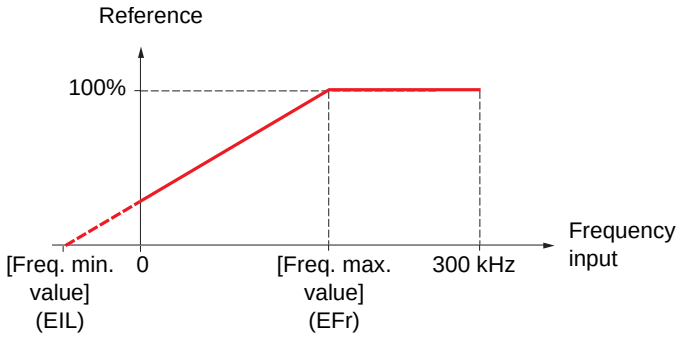

A reference can be obtained at zero frequency by assigning a negative value to the minimum value.

The encoder configuration can also be accessed in the [1.4 MOTOR CONTROL] (drC-) menu.

Code	Name/Description	Adjustment range	Factory setting
IEn-	**[ENCODER CONFIGURATION]** The encoder parameters can only be accessed if a compatible encoder card has been inserted, and the available selections will depend on the type of encoder card used.		
EnS	**[Encoder type]** The parameter can be accessed if an encoder card has been inserted. To be configured in accordance with the type of encoder used. AAbb **[AABB]** (AAbb): For signals A, A-, B, B-. Ab **[AB]** (Ab): For signals A, B. A **[A]** (A): For signal A. Value cannot be accessed if [Encoder usage] (EnU) page 95 = [Spd fdk reg.] (rEG).		[AABB] (AAbb)
EnC	**[Encoder check]** Encoder feedback check See procedure page 76. The parameter can be accessed if an encoder card has been inserted and if [Encoder usage] (EnU) page 95 is not [Speed ref.] (PGr). nO **[Not done]** (nO) Check not performed. YES **[Yes]** (YES): Activates monitoring of the encoder. dOnE **[Done]** (dOnE): Check performed successfully. The check procedure checks: - The direction of rotation of the encoder/motor - The presence of signals (wiring continuity) - The number of pulses/revolution If a fault is detected, the drive locks in [Encoder fault] (EnF) fault mode.		[Not done] (nO)

Code	Name/Description	Adjustment range	Factory setting
	[ENCODER CONFIGURATION] (continued)		
EnU	**[Encoder usage]** The parameter can be accessed if an encoder card has been inserted. nO **[No]** (nO): Function inactive, In this case, the other parameters cannot be accessed. SEC **[Fdbk monit.]** (SEC): The encoder provides speed feedback for monitoring only. rEG **[Spd fdk reg.]** (rEG): The encoder provides speed feedback for regulation and monitoring. If [Motor control type] (Ctt) = [SVC U] (UUC) the encoder operates in speed feedback mode and enables static correction of the speed to be performed. This configuration is not accessible for other [Motor control type] (Ctt) values. PGr **[Speed ref.]** (PGr): The encoder provides a reference.		[No] (nO)
PGI	**[Number of pulses]** Number of pulses per encoder revolution. The parameter can be accessed if an encoder card has been inserted.	100 to 5,000	1,024
PGA	**[Reference type]** The parameter can be accessed if [Encoder usage] (EnU) = [Speed ref.] (PGr). EnC **[Encoder]** (EnC): Use of an encoder. PtG **[Freq. gen.]** (PtG): Use of a frequency generator (absolute speed setpoint).		[Encoder] (EnC)
EIL	**[Freq. min. value]** The parameter can be accessed if [Encoder usage] (EnU) = [Speed ref.] (PGr) and if [Reference type] (PGA) = [Freq. gen.] (PtG). Frequency corresponding to the minimum speed	- 300 to 300 kHz	0
EFr	**[Freq. max value]** The parameter can be accessed if [Encoder usage] (EnU) = [Speed ref.] (PGr) and if [Reference type] (PGA) = [Freq. gen.] (PtG). Frequency corresponding to the maximum speed	0.00 to 300 kHz	300 kHz
EFI	**[Freq. signal filter]** The parameter can be accessed if [Encoder usage] (EnU) = [Speed ref.] (PGr). Interference filtering.	0 to 1,000 ms	0

Code	Name/Description	Adjustment range	Factory setting
r1-	**[R1 CONFIGURATION]**		
r1	**[R1 Assignment]**		[No drive flt] (FLt)
nO	☐ **[No]** (nO): Not assigned		
FLt	☐ **[No drive flt]** (FLt): Drive not faulty (relay normally energized, and de-energized if there is a fault)		
rUn	☐ **[Drv running]** (rUn): Drive running		
FtA	☐ **[Freq. Th. attain.]** (FtA): The relay is closed if the frequency is greater than [Freq. threshold] (Ftd) page 60.		
FLA	☐ **[HSP attain.]** (FLA): High speed reached		
CtA	☐ **[Current Th. attained]** (CtA): The relay is closed if the current is greater than [Current threshold] (Ctd) page 60.		
SrA	☐ **[Freq.ref.att]** (SrA): Frequency reference reached		
tSA	☐ **[Th.mot. att.]** (tSA): Motor 1 thermal state reached		
PEE	☐ **[PID error al]** (PEE): PID error alarm		
PFA	☐ **[PID fdbk al.]** (PFA): PID feedback alarm (greater than [Max fbk alarm] (PAH) page 154 or less than [Min fbk alarm] (PAL) page 154)		
AP2	☐ **[AI2 AI. 4-20]** (AP2): Alarm indicating absence of 4-20 mA signal on input AI2		
F2A	☐ **[Freq. Th. 2 attain.]** (F2A): The relay is closed if the frequency is greater than [Freq. threshold 2] (F2d) page 60.		
tAd	☐ **[Th.drv.att.]** (tAd): Drive thermal state reached		
ttHA	☐ **[High tq. att.]** (ttHA): Motor torque greater than high threshold [High torque thd.] (ttH) page 60		
ttLA	☐ **[Low tq. att.]** (ttLA): Motor torque less than low threshold [Low torque thd.] (ttL) page 60		
MFrd	☐ **[Forward]** (MFrd): Motor running forward		
MrrS	☐ **[Reverse]** (MrrS): Motor running in reverse		
rtAH	☐ **[High Reference Att.]** (rtAH): The relay is closed if the frequency reference is greater than [High Freq. Ref. Thr.] (rtd) page 61.		
rtAL	☐ **[Low Reference Att.]** (rtAL): The relay is closed if the frequency reference is less than [Low Freq. Ref. Thr.] (rtdL) page 61.		
FtAL	☐ **[Low Frq. Th. Attain.]** (FtAL): The relay is closed if the frequency is less than [Low Freq.Threshold] (FtdL) page 60.		
F2AL	☐ **[2Low F.Thld]** (F2AL): The relay is closed if the frequency is less than [2 Freq. Threshold] (F2dL) page 60.		
CtAL	☐ **[Low I Th.At.]** (CtAL): The relay is closed if the current is less than [Low I Threshold] (CtdL) page 60.		
ULA	☐ **[Pro.Undload]** (ULA): Process underload (see page 210)		
OLA	☐ **[Ovld.P.Alrm]** (OLA): Process overload (see page 212)		
PFAH	☐ **[PID high AI.]** (PFAH): PID feedback alarm (greater than [Max fbk alarm] (PAH) page 154).		
PFAL	☐ **[PID low Alarm]** (PFAL): PID feedback alarm (less than [Min fbk alarm] (PAL) page 154).		
PISH	☐ **[Regul.Alarm]** (PISH): PID regulator feedback supervision fault page 157.		
Ern	☐ **[Emerg. Run]** (Ern): The relay is closed if the drive is in emergency run. See [Forced Run] (InHS) page 203.		
tS2	☐ **[Th.mot2 att.]** (tS2): Motor 2 thermal state reached		
tS3	☐ **[Th.mot3 att]** (tS3): Motor 3 thermal state reached		
Strt	☐ **[Drive start]** (Strt) 1 : A run order has been received 0 : A stop order has been received		
bMP	☐ **[Rem.Cmd]** (bMP): Control via the graphic display terminal is activated via a function key on the terminal.		

Code	Name/Description	Adjustment range	Factory setting
r1-	**[R1 CONFIGURATION]** (continued)		
r1	**[R1 Assignment]** (continued)		

- ☐ **[Neg Torque]** (AtS): Negative torque (braking)
- ☐ **[Cnfg.0 act.]** (CnF0): Configuration 0 active
- ☐ **[Cnfg.1 act.]** (CnF1): Configuration 1 active
- ☐ **[Cnfg.2 act.]** (CnF2): Configuration 2 active
- ☐ **[Set 1 active]** (CFP1): Parameter set 1 active
- ☐ **[Set 2 active]** (CFP2): Parameter set 2 active
- ☐ **[Set 3 active]** (CFP3): Parameter set 3 active
- ☐ **[DC charged]** (dbL): DC bus loading
- ☐ **[In braking]** (brS): Drive braking
- ☐ **[P. removed]** (PRM): Drive locked by “Power removal” input
- ☐ **[Fr.met. alar.]** (FqLA): Measured speed threshold attained: [Pulse warning thd.] (FqL) page 60
- ☐ **[I present]** (MCP): Motor current present
- ☐ **[Alarm Grp 1]** (AGI): Alarm group 1
- ☐ **[Alarm Grp 2]** (AG2): Alarm group 2
- ☐ **[Alarm Grp 3]** (AG3): Alarm group 3
- ☐ **[PTC1 alarm]** (P1A): Probe alarm 1
- ☐ **[PTC2 alarm]** (P2A): Probe alarm 2
- ☐ **[LI6=PTC al.]** (PLA): LI6 = PTC probe alarms
- ☐ **[Ext. fault al]** (EFA): External fault alarm
- ☐ **[Under V. al.]** (USA): Undervoltage alarm
- ☐ **[Uvolt warn]** (UPA): Undervoltage warning
- ☐ **[Al. °C drv]** (tHA): Drive overheating
- ☐ **[Lim T/I att.]** (SSA): Torque limit alarm
- ☐ **[IGBT al.]** (tJA): IGBT alarm
- ☐ **[Brake R. al.]** (bOA): Braking resistor temperature alarm
- ☐ **[Option al.]** (APA): Alarm generated by the Controller Inside card
- ☐ **[AI3 Al. 4-20]** (AP3): Alarm indicating absence of 4-20 mA signal on input AI3
- ☐ **[AI4 Al. 4-20]** (AP4): Alarm indicating absence of 4-20 mA signal on input AI4
- ☐ **[Flow Limit.]** (FSA): Flow rate limiting active (see page 184)
- ☐ **[Ready]** (rdY): Drive ready

Code	Name/Description	Adjustment range	Factory setting
	[R1 CONFIGURATION] (continued)		
r1d	**[R1 Delay time]** The change in state only takes effect once the configured time has elapsed, when the information becomes true. The delay cannot be set for the [No drive flt] (FLt) assignment, and remains at 0.	0 to 60000 ms (1)	0
r1S POS nEG	**[R1 Active at]** Configuration of the operating logic: ☐ **[1]**: State 1 when the information is true ☐ **[0]**: State 0 when the information is true Configuration [1] (POS) cannot be modified for the [No drive flt] (FLt), assignment.		[1] (POS)
r1H	**[R1 Holding time]** The change in state only takes effect once the configured time has elapsed, when the information becomes false. The holding time cannot be set for the [No drive flt] (FLt) assignment, and remains at 0.	0 to 9,999 ms	0
r2-	**[R2 CONFIGURATION]**		
r2 LLC OCC dCO dAM	**[R2 Assignment]** Identical to R1 (see page 96) with the addition of (shown for information only as these selections can only be configured in the [APPLICATION FUNCT.] (Fun-)) menu: ☐ **[Input cont.]** (LLC): Line contactor control ☐ **[Output cont]** (OCC): Output contactor control ☐ **[DC charging]** (dCO): DC bus precharging contactor control ☐ **[Damper]** (dAM): Damper control		[Drv running] (rUn)
r2d	**[R2 Delay time]** The delay cannot be set for the [No drive flt] (FLt), [Output cont] (OCC), [DC charging] (dCO), and [Input cont.] (LLC) assignments, and remains at 0. The change in state only takes effect once the configured time has elapsed, when the information becomes true.	0 to 60000 ms (1)	0
r2S POS nEG	**[R2 Active at]** Configuration of the operating logic: ☐ **[1]**: State 1 when the information is true ☐ **[0]**: State 0 when the information is true The [1] (POS) configuration cannot be modified for the[No drive flt] (FLt), [DC charging] (dCO) and [Input cont.] (LLC), assignments.		[1] (POS)
r2H	**[R2 Holding time]** The holding time cannot be set for the [No drive flt] (FLt), [DC charging] (dCO) and [Input cont.] (LLC) assignments, and remains at 0. The change in state only takes effect once the configured time has elapsed, when the information becomes false.	0 to 9,999 ms	0

(1) 0 to 9999 ms then 10.00 to 60.00 s on the integrated display terminal.

Code	Name/Description	Adjustment range	Factory setting
r3-	**[R3 CONFIGURATION]** Can be accessed if a VW3A3201 option card has been inserted		
r3	**[R3 Assignment]** Identical to R2		[No] (nO)
r3d	**[R3 Delay time]** The delay cannot be set for the [No drive flt] (FLt), [Output cont] (OCC), [DC charging] (dCO), and [Input cont.] (LLC) assignments, and remains at 0. The change in state only takes effect once the configured time has elapsed, when the information becomes true.	0 to 60000 ms (1)	0
r3S POS nEG	**[R3 Active at]** Configuration of the operating logic: ☐ **[1]**: State 1 when the information is true ☐ **[0]**: State 0 when the information is true The [1] (POS) configuration cannot be modified for the[No drive flt] (FLt), [DC charging] (dCO) and [Input cont.] (LLC), assignments.		[1] (POS)
r3H	**[R3 Holding time]** The holding time cannot be set for the [No drive flt] (FLt), [DC charging] (dCO) and [Input cont.] (LLC) assignments, and remains at 0. The change in state only takes effect once the configured time has elapsed, when the information becomes false.	0 to 9,999 ms	0
r4-	**[R4 CONFIGURATION]** Can be accessed if a VW3A3202 option card has been inserted		
r4	**[R4 Assignment]** Identical to R2 (see page 98).		[No] (nO)
r4d	**[R4 Delay time]** The delay cannot be set for the [No drive flt] (FLt), [Output cont] (OCC), [DC charging] (dCO), and [Input cont.] (LLC) assignments, and remains at 0. The change in state only takes effect once the configured time has elapsed, when the information becomes true.	0 to 60000 ms (1)	0
r4S POS nEG	**[R4 Active at]** Configuration of the operating logic: ☐ **[1]**: State 1 when the information is true ☐ **[0]**: State 0 when the information is true The [1] (POS) configuration cannot be modified for the[No drive flt] (FLt), [DC charging] (dCO) and [Input cont.] (LLC), assignments.		[1] (POS)
r4H	**[R4 Holding time]** The holding time cannot be set for the [No drive flt] (FLt), [DC charging] (dCO) and [Input cont.] (LLC) assignments, and remains at 0. The change in state only takes effect once the configured time has elapsed, when the information becomes false.	0 to 9,999 ms	0

(1) 0 to 9999 ms then 10.00 to 60.00 s on the integrated display terminal.

Code	Name/Description	Adjustment range	Factory setting
LO1-	**[LO1 CONFIGURATION]** Can be accessed if a VW3A3201 option card has been inserted		
LO1	**[LO1 assignment]** Identical to R1 (see page 96) with the addition of (shown for information only as these selections can only be configured in the [APPLICATION FUNCT.] (Fun-)) menu: LLC ☐ **[Input cont.]** (LLC): Line contactor control OCC ☐ **[Output cont]** (OCC): Output contactor control dCO ☐ **[[DC charging]** (dCO): DC bus precharging contactor control dAM ☐ **[Damper]** (dAM): Damper control		[No] (nO)
LO1d	**[LO1 delay time]** The delay cannot be set for the [No drive flt] (FLt), [Output cont] (OCC), [DC charging] (dCO), and [Input cont.] (LLC) assignments, and remains at 0. The change in state only takes effect once the configured time has elapsed, when the information becomes true.	0 to 60000 ms (1)	0
LO1S	**[LO1 active at]** Configuration of the operating logic: POS ☐ **[1]**: State 1 when the information is true nEG ☐ **[0]**: State 0 when the information is true The [1] (POS) configuration cannot be modified for the[No drive flt] (FLt), [DC charging] (dCO) and [Input cont.] (LLC), assignments.		[1] (POS)
LO1H	**[LO1 holding time]** The holding time cannot be set for the [No drive flt] (FLt), [DC charging] (dCO) and [Input cont.] (LLC) assignments, and remains at 0. The change in state only takes effect once the configured time has elapsed, when the information becomes false.	0 to 9,999 ms	0
LO2-	**[LO2 CONFIGURATION]** Can be accessed if a VW3A3201 option card has been inserted		
LO2	**[LO2 assignment]** Identical to LO1.		[No] (nO)
LO2d	**[LO2 delay time]** The delay cannot be set for the [No drive flt] (FLt), [Output cont] (OCC), [DC charging] (dCO), and [Input cont.] (LLC) assignments, and remains at 0. The change in state only takes effect once the configured time has elapsed, when the information becomes true.	0 to 60000 ms (1)	0
LO2S	**[LO2 active at]** Configuration of the operating logic: POS ☐ **[1]**: State 1 when the information is true nEG ☐ **[0]**: State 0 when the information is true The [1] (POS) configuration cannot be modified for the[No drive flt] (FLt), [DC charging] (dCO) and [Input cont.] (LLC), assignments.		[1] (POS)
LO2H	**[LO2 holding time]** The holding time cannot be set for the [No drive flt] (FLt), [DC charging] (dCO) and [Input cont.] (LLC) assignments, and remains at 0. The change in state only takes effect once the configured time has elapsed, when the information becomes false.	0 to 9,999 ms	0

(1) 0 to 9999 ms then 10.00 to 60.00 s on the integrated display terminal.

Code	Name/Description	Adjustment range	Factory setting
LO3-	**[LO3 CONFIGURATION]** Can be accessed if a VW3A3202 option card has been inserted		
LO3	**[LO3 assignment]** Identical to LO1 (see page 100).		[No] (nO)
LO3d	**[LO3 delay time]** The delay cannot be set for the [No drive flt] (FLt), [Output cont] (OCC), [DC charging] (dCO), and [Input cont.] (LLC) assignments, and remains at 0. The change in state only takes effect once the configured time has elapsed, when the information becomes true.	0 to 60000 ms (1)	0
LO3S POS nEG	**[LO3 active at]** Configuration of the operating logic: ☐ **[1]**: State 1 when the information is true ☐ **[0]**: State 0 when the information is true The [1] (POS) configuration cannot be modified for the[No drive flt] (FLt), [DC charging] (dCO) and [Input cont.] (LLC), assignments.		[1] (POS)
LO3H	**[LO3 holding time]** The holding time cannot be set for the [No drive flt] (FLt), [DC charging] (dCO) and [Input cont.] (LLC) assignments, and remains at 0. The change in state only takes effect once the configured time has elapsed, when the information becomes false.	0 to 9,999 ms	0
LO4-	**[LO4 CONFIGURATION]** Can be accessed if a VW3A3202 option card has been inserted		
LO4	**[LO4 assignment]** Identical to LO1 (see page 100).		[No] (nO)
LO4d	**[LO4 delay time]** The delay cannot be set for the [No drive flt] (FLt), [Output cont] (OCC), [DC charging] (dCO), and [Input cont.] (LLC) assignments, and remains at 0. The change in state only takes effect once the configured time has elapsed, when the information becomes true.	0 to 60000 ms (1)	0
LO4S POS nEG	**[LO4 active at]** Configuration of the operating logic: ☐ **[1]**: State 1 when the information is true ☐ **[0]**: State 0 when the information is true The [1] (POS) configuration cannot be modified for the[No drive flt] (FLt), [DC charging] (dCO) and [Input cont.] (LLC), assignments.		[1] (POS)
LO4H	**[LO4 holding time]** The holding time cannot be set for the [No drive flt] (FLt), [DC charging] (dCO) and [Input cont.] (LLC) assignments, and remains at 0. The change in state only takes effect once the configured time has elapsed, when the information becomes false.	0 to 9,999 ms	0

(1) 0 to 9999 ms then 10.00 to 60.00 s on the integrated display terminal.

Use of analog output AO1 as a logic output

Analog output AO1 can be used as a logic output, by assigning DO1. In this case, state 0 of this output corresponds to the minimum value of AO1 (0 V or 0 mA, for example), and state 1 corresponds to the maxium value of AO1 (10 V or 20 mA, for example).
The electrical characteristics of this analog output remain unchanged. As they differ from logic output characteristics, it is important to ensure that they are compatible with the intended application.

Code	Name/Description	Adjustment range	Factory setting
dO1-	**[DO1 CONFIGURATION]**		
dO1	**[DO1 assignment]** Identical to R1 (see page 96) with the addition of (shown for information only as these selections can only be configured in the [1.7 APPLICATION FUNCT.] (Fun-) menu): LLC **[Input cont.]** (LLC): Line contactor control OCC **[Output cont]** (OCC): Output contactor control dCO **[DC charging]** (dCO): DC bus precharging contactor control dAM **[Damper]** (dAM): Damper control		[No] (nO)
dO1d	**[DO1 delay time]** The delay cannot be set for the [No drive flt] (FLt), [Output cont] (OCC), [DC charging] (dCO), and [Input cont.] (LLC) assignments, and remains at 0. The change in state only takes effect once the configured time has elapsed, when the information becomes true.	0 to 60000 ms (1)	0
dO1S	**[DO1 active at]** Configuration of the operating logic: POS **[1]** (POS): State 1 when the information is true nEG **[0]** (nEG): State 0 when the information is true The [1] (POS) configuration cannot be modified for the [No drive flt] (FLt), [DC charging] (dCO) and [Input cont.] (LLC) assignments.		[1] (POS)
dO1H	**[DO1 holding time]** The holding time cannot be set for the [No drive flt] (FLt), [DC charging] (dCO) and [Input cont.] (LLC) assignments, and remains at 0. The change in state only takes effect once the configured time has elapsed, when the information becomes false.	0 to 9999 ms	0

(1) 0 to 9999 ms then 10.00 to 60.00 s on the integrated display terminal.

Configuration of analog outputs

Minimum and maximum values (output values):

The minimum output value, in volts or mA, corresponds to the lower limit of the assigned parameter and the maximum value corresponds to its upper limit. The minimum value may be greater than the maximum value:

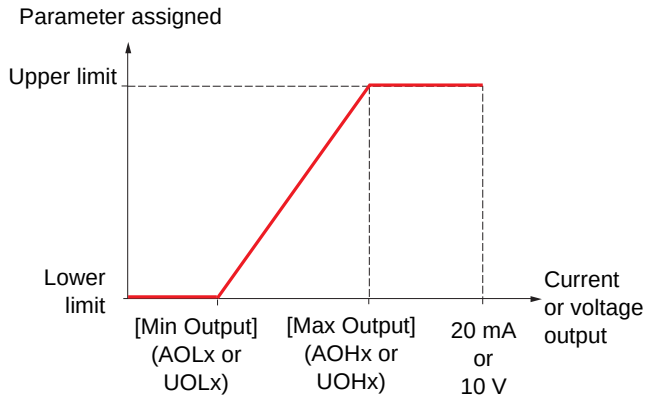

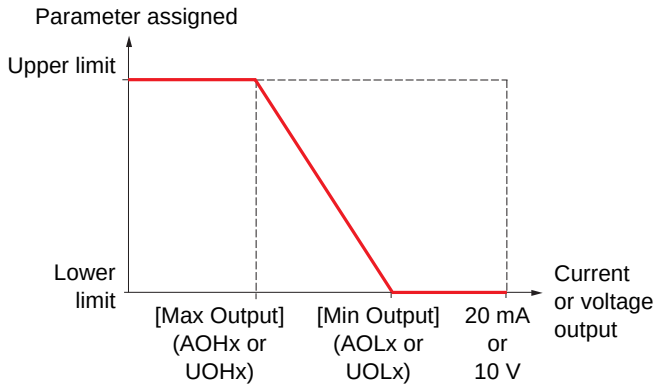

Outputs AO2 and AO3 configured as bipolar outputs (strongly recommended for signed parameters):

The [min Output] (UOLx) and [max Output] (UOHx) parameters are absolute values, although they function symmetrically. In the case of bipolar outputs, always set the maximum value higher than the minimum value.
The [max Output] (UOHx) corresponds to the upper limit of the assigned parameter, and the [min Output] (UOLx) corresponds to an average value between the upper and lower limits (0 for a signed and symmetrical parameter such as in the example below).

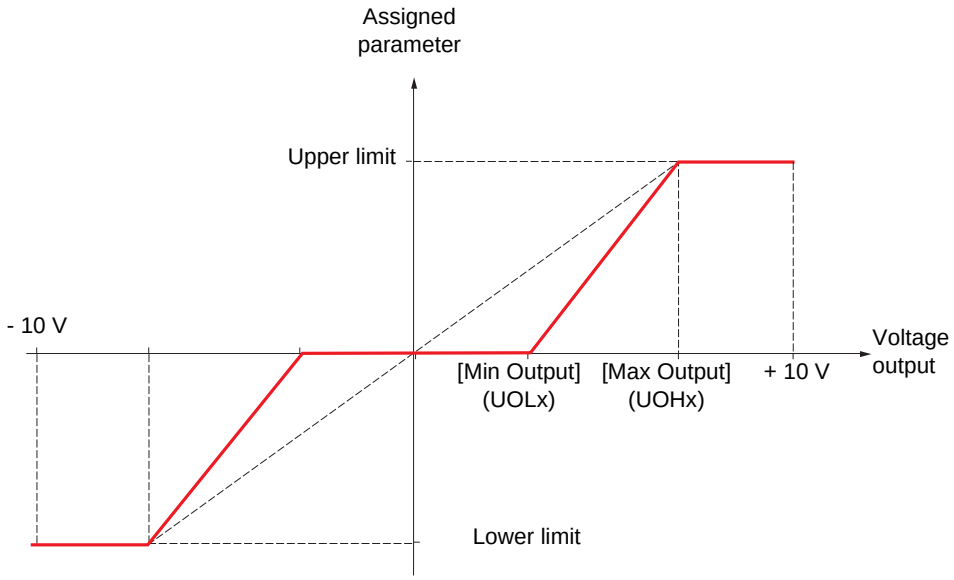

Scaling of the assigned parameter

The scale of the assigned parameter can be adapted in accordance with requirements by modifying the values of the lower and upper limits by means of two parameters for each analog output.
These parameters are given as a %; 100% corresponds to the total variation range of the configured parameter, so:

- 100% = upper limit - lower limit. For example, for [Sign. torque] (Stq), which varies between -3 and +3 times the rated torque, 100% corresponds to 6 times the rated torque.

- The parameter [Scaling AOx min] (ASLx) modifies the lower limit: new value = lower limit + (range x ASLx). The value 0% (factory setting) does not modify the lower limit.
- The [Scaling AOx max] (ASHx) parameter modifies the upper limit: new value = lower limit + (range x ASHx). The value 100% (factory setting) does not modify the upper limit.
- [Scaling AOx min] (ASLx) must always be lower than [Scaling AOx max] (ASHx).

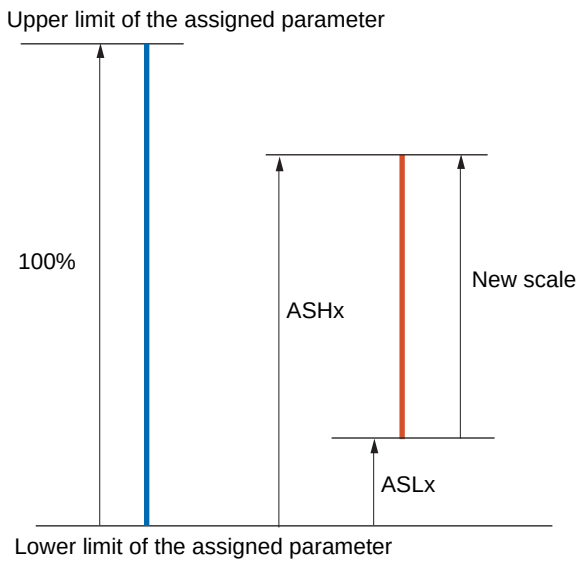

Application example 1

The value of the signed motor torque at the AO2 output is to be transferred with +/- 10 V, with a range of -2 Tr to +2 Tr

The parameter [Sign. torque.] (Stq) varies between -3 and +3 times the rated torque, or a range of 6 times the rated torque.

[Scaling AO2 min] (ASL2) must modify the lower limit by 1x the rated torque, or 100/6 = 16.7% (new value = lower limit + (range x ASL2).

[Scaling AO2 max] (ASH2) must modify the upper limit by 1x the rated torque, or 100 - 100/6 = 83.3% (new value = lower limit + (range x ASH2).

Application example 2

The value of the motor current at the AO2 output is to be transferred with 0 - 20 mA, with a range of 2 In motor, In motor being the equivalent of a 0.8 In drive.

The parameter [I motor] (OCr) varies between 0 and 2 times the rated drive current, or a range of 2.5 times the rated drive current.

[Scaling AO2 min] (ASL2) must not modify the lower limit, which therefore remains at its factory setting of 0%.

[Scaling AO2 max] (ASH2) must modify the upper limit by 0.5x the rated motor torque, or 100 - 100/5 = 80% (new value = lower limit + (range x ASH2).

Code	Name/Description	Adjustment range	Factory setting
AO1-	**[AO1 CONFIGURATION]**		
AO1	**[AO1 assignment]** nO **[No]** (nO): Not assigned OCr **[I motor]** (OCr): Current in the motor, between 0 and 2 In (In = rated drive current indicated in the Installation Manual and on the drive nameplate). OFr **[Motor freq.]** (OFr): Output frequency, between 0 and [Max frequency] (tFr) OrP **[Ramp out.]** (OrP): Between 0 and [Max frequency] (tFr) trq **[Motor torq.]** (trq): Motor torque, between 0 and 3 times the rated motor torque Stq **[Sign. torque]** (Stq): Signed motor torque, between -3 and +3 times the rated motor torque. The + sign corresponds to motor mode and the - sign to generator mode (braking). OrS **[sign ramp]** (OrS): Signed ramp output, between – [Max frequency] (tFr) and + [Max frequency] (tFr) OPS **[PID ref.]** (OPS): PID regulator reference between [Min PID reference] (PIP1) and [Max PID reference] (PIP2) OPF **[PID feedback]** (OPF): PID regulator feedback between [Min PID feedback] (PIF1) and [Max PID feedback] (PIF2) OPE **[PID error]** (OPE): PID regulator error between -5% and +5% of ([Max PID feedback] (PIF2) – [Min PID feedback] (PIF1)) OPI **[PID output]** (OPI): PID regulator output between [Low speed] (LSP) and [High speed] (HSP) OPr **[Mot. power]** (OPr): Motor power, between 0 and 2.5 times [Rated motor power] (nPr) tHr **[Mot thermal]** (tHr): Motor thermal state, between 0 and 200% of the rated thermal state tHd **[Drv thermal]** (tHd): Drive thermal state, between 0 and 200% of the rated thermal state tqMS **[Torque 4Q]** (tqMS): Signed motor torque, between -3 and +3 times the rated motor torque. The + sign and the - sign correspond to the physical direction of the torque, regardless of mode (motor or generator). OFrr **[Meas.mot.fr]** (OFrr): Measured motor speed if an encoder card has been inserted, otherwise 0 appears. OFS **[Sig. o/p frq.]** (OFS): Signed output frequency, between – [Max frequency] (tFr) and + [Max frequency] (tFr) tHr2 **[Mot therm2]** (tHr2): Thermal state of motor 2, between 0 and 200% of the rated thermal state tHr3 **[Mot therm3]** (tHr3): Thermal state of motor 3, between 0 and 200% of the rated thermal state Utr **[Uns.TrqRef]** (Utr): Torque reference, between 0 and 3 times the rated motor torque Str **[Sign trq ref.]** (Str): Signed torque reference, between -3 and +3 times the rated motor torque tqL **[Torque lim.]** (tqL): Torque limit, between 0 and 3 times the rated motor torque UOP **[Motor volt.]** (UOP): Voltage applied to the motor, between 0 and [Rated motor volt.] (UnS) dO1 **dO1]** (dO1): Assigned as logic output. This assignment can only appear if [DO1 assignment] (dO1) page 102 has been assigned. This is the only possible choice in this case, and is displayed for information purposes only.		[No] (nO)
AO1t	**[AO1 Type]** 10U **[Voltage]** (10U): **Voltage output** 0A **[Current]** (0 A): Current output		[Current] (0 A)
AOL1	**[AO1 min Output]** The parameter can be accessed if [AO1 Type] (AO1t) = [Current] (0 A)	0 to 20.0 mA	0 mA
AOH1	**[AO1 max Output]** The parameter can be accessed if [AO1 Type] (AO1t) = [Current] (0 A)	0 to 20.0 mA	20.0 mA
UOL1	**[AO1 min Output]** The parameter can be accessed if [AO1 Type] (AO1t) = [Voltage] (10U)	0 to 10.0 V	0 V
UOH1	**[AO1 max Output]** The parameter can be accessed if [AO1 Type] (AO1t) = [Voltage] (10U)	0 to 10.0 V	10.0 V

Code	Name/Description	Adjustment range	Factory setting
AO1-	■ [AO1 CONFIGURATION] (continued)		
ASL1	❑ [Scaling AO1 min]	0 to 100.0%	0%
	Scaling of the lower limit of the assigned parameter, as a % of the maximum possible variation.		
ASH1	❑ [Scaling AO1 max]	0 to 100.0%	100.0%
	Scaling of the upper limit of the assigned parameter, as a % of the maximum possible variation.		
AO1F	❑ [AO1 Filter]	0 to 10.00 s	0 s
	Interference filtering. This parameter is forced to 0 if [AO1 assignment] (AO1) = [dO1] (dO1).		

Code	Name/Description	Adjustment range	Factory setting
AO2-	**[AO2 CONFIGURATION]** Can be accessed if a VW3A3202 option card has been inserted		
AO2	**[AO2 assignment]** Same assignments as AO1, without [dO1] (dO1)		[No] (nO)
AO2t 10U 0A n10U	**[AO2 Type]** ☐ **[Voltage]** (10U): Voltage output ☐ **[Current]** (0 A): Current output ☐ **[Voltage +/-]** (n10U): Bipolar voltage output		[Current] (0 A)
AOL2	**[AO2 min Output]** The parameter can be accessed if [AO2 Type] (AO2t) = [Current] (0 A)	0 to 20.0 mA	0 mA
AOH2	**[AO2 max Output]** The parameter can be accessed if [AO2 Type] (AO2t) = [Current] (0 A)	0 to 20.0 mA	20.0 mA
UOL2	**[AO2 min Output]** The parameter can be accessed if [AO2 Type] (AO2t) = [Voltage] (10U) or [Voltage +/-] (n10U)	0 to 10.0 V	0 V
UOH2	**[AO2 max Output]** The parameter can be accessed if [AO2 Type] (AO2t) = [Voltage] (10U) or [Voltage +/-] (n10U)	0 to 10.0 V	10.0 V
ASL2	**[Scaling AO2 min]** Scaling of the lower limit of the assigned parameter, as a % of the maximum possible variation.	0 to 100.0%	0%
ASH2	**[Scaling AO2 max]** Scaling of the upper limit of the assigned parameter, as a % of the maximum possible variation.	0 to 100.0%	100.0%
AO2F	**[AO2 Filter]** Interference filtering.	0 to 10.00 s	0 s

Code	Name/Description	Adjustment range	Factory setting
AO3-	**[AO3 CONFIGURATION]** Can be accessed if a VW3A3202 option card has been inserted		
AO3	**[AO3 assignment]** Same assignments as AO1, without [dO1] (dO1)		[No] (nO)
AO3t 10U 0A n10U	**[AO3 Type]** **[Voltage]** (10U): Voltage output **[Current]** (0 A): Current output **[Voltage +/-]** (n10U): Bipolar voltage output		[Current] (0 A)
AOL3	**[AO3 min Output]** The parameter can be accessed if [AO3 Type] (AO3t) = [Current] (0 A)	0 to 20.0 mA	0 mA
AOH3	**[AO3 max Output]** The parameter can be accessed if [AO3 Type] (AO3t) = [Current] (0 A)	0 to 20.0 mA	20.0 mA
UOL3	**[AO3 min Output]** The parameter can be accessed if [AO3 Type] (AO3t) = [Voltage] (10U) or [Voltage +/-] (n10U)	0 to 10.0 V	0 V
UOH3	**[AO3 max Output]** The parameter can be accessed if [AO3 Type] (AO3t) = [Voltage] (10U) or [Voltage +/-] (n10U)	0 to 10.0 V	10.0 V
ASL3	**[Scaling AO3 min]** Scaling of the lower limit of the assigned parameter, as a % of the maximum possible variation.	0 to 100.0%	0%
ASH3	**[Scaling AO3 max]** Scaling of the upper limit of the assigned parameter, as a % of the maximum possible variation.	0 to 100.0%	100.0%
AO3F	**[AO3 Filter]** Interference filtering.	0 to 10.00 s	0 s

The following submenus group the alarms into 1 to 3 groups, each of which can be assigned to a relay or a logic output for remote signaling. These groups can also be displayed on the graphic display terminal (see [6 MONITORING CONFIG.] menu) and viewed via the [1.2 MONITORING] (SUP) menu.
When one or a number of alarms selected in a group occurs, this alarm group is activated.

Code	Name/Description	Adjustment range	Factory setting
A1C-	**[ALARM GRP1 DEFINITION]**		
	Selection to be made from the following list:		
PLA	☐ **[LI6=PTC al.]** (PLA): LI6 = PTC probe alarms		
P1A	☐ **[PTC1 alarm]** (P1A): Probe alarm 1		
P2A	☐ **[PTC2 alarm]** (P2A): Probe alarm 2		
EFA	☐ **[Ext. fault al]** (EFA): External fault alarm		
USA	☐ **[Under V. al.]** (USA): Undervoltage alarm		
CtA	☐ **[I attained]** (CtA): The current is greater than [Current threshold] (Ctd) page 60.		
CtAL	☐ **[Low I Thres. Attain.]** (CtAL): The current is less than [Low I Threshold] (CtdL) page 60.		
FtA	☐ **[Freq. Th. attain.]** (FtA): The frequency is greater than [Freq. threshold] (Ftd) page 60.		
FtAL	☐ **[Low Frq. Th. Attain.]** (FtAL): The frequency is less than [Low Freq.Threshold] (FtdL) page 60.		
F2A	☐ **[Freq. Th. 2 attain.]** (F2A): The frequency is greater than [Freq. threshold 2] (F2d) page 60.		
F2AL	☐ **[Fq. Low Th. 2 attain]** (F2AL): The frequency is less than [2 Freq. Threshold] (F2dL) page 60.		
SrA	☐ **[Freq.ref.att]** (SrA): Frequency reference reached		
tSA	☐ **[Th.mot. att.]** (tSA): Motor 1 thermal state reached		
tS2	☐ **[Th.mot2 att.]** (tS2): Motor 2 thermal state reached		
tS3	☐ **[Th.mot3 att]** (tS3): Motor 3 thermal state reached		
UPA	☐ **[Uvolt warn]** (UPA): Undervoltage warning		
FLA	☐ **[HSP attain.]** (FLA): High speed reached		
tHA	☐ **[Al. °C drv]** (tHA): Drive overheating		
PEE	☐ **[PID error al]** (PEE): PID error alarm		
PFA	☐ **[PID fdbk al.]** (PFA): PID feedback alarm (greater than [Max fbk alarm] (PAH) page 154 or less than [Min fbk alarm] (PAL) page 154)		
PFAH	☐ **[PID high Alarm]** (PFAH): PID feedback alarm (greater than [Max fbk alarm] (PAH) page 154).		
PFAL	☐ **[PID low Alarm]** (PFAL): PID feedback alarm (less than [Min fbk alarm] (PAL) page 154).		
PISH	☐ **[Regulation Alarm]** (PISH): PID regulator feedback supervision fault page 157.		
AP2	☐ **[AI2 Al. 4-20]** (AP2): Alarm indicating absence of 4-20 mA signal on input AI2		
AP3	☐ **[AI3 Al. 4-20]** (AP3): Alarm indicating absence of 4-20 mA signal on input AI3		
AP4	☐ **[AI4 Al. 4-20]** (AP4): Alarm indicating absence of 4-20 mA signal on input AI4		
SSA	☐ **[Lim T/I att.]** (SSA): Torque limit alarm		
tAd	☐ **[Th.drv.att.]** (tAd): Drive thermal state reached		
tJA	☐ **[IGBT alarm]** (tJA): IGBT alarm		
bOA	☐ **[Brake R. al.]** (bOA): Braking resistor temperature alarm		
APA	☐ **[Option alarm]** (APA): Alarm generated by an option card.		
UrA	☐ **[Regen. underV. al.]** (UrA): Reserved.		
rtAH	☐ **[High Reference Att.]** (rtAH): The frequency reference is greater than [High Freq. Ref. Thr.] (rtd) page 61.		
rtAL	☐ **[Low Reference Att.]** (rtAL): The frequency reference is less than [Low Freq. Ref. Thr.] (rtdL) page 61.		
ULA	☐ **[Underload. Proc. Al.]** (ULA): Process underload (see page 210)		
OLA	☐ **[Overload. Proc. Al.]** (OLA): Process overload (see page 212)		
FSA	☐ **[Flow Limit. active]** (FSA): Flow rate limiting active (see page 184)		
Ern	☐ **[Emerg. Run]** (Ern): Emergency run in progress (see page 203)		
ttHA	☐ **[High torque alarm]** (ttHA): Motor torque greater than high threshold [High torque thd.] (ttH) page 60		
ttLA	☐ **[Low torque alarm]** (ttLA): Motor torque less than low threshold [Low torque thd.] (ttL) page 60		
FqLA	☐ **[Freq. meter Alarm]** (FqLA): Measured speed threshold attained: [Pulse warning thd.] (FqL) page 60		
	See the multiple selection procedure on page 26 for the integrated display terminal, and page 17 for the graphic display terminal.		
A2C-	**[ALARM GRP2 DEFINITION]**		
	Identical to [ALARM GRP1 DEFINITION] (A1C-)		
A3C-	**[ALARM GRP3 DEFINITION]**		
	Identical to [ALARM GRP1 DEFINITION] (A1C-)		

With graphic display terminal:

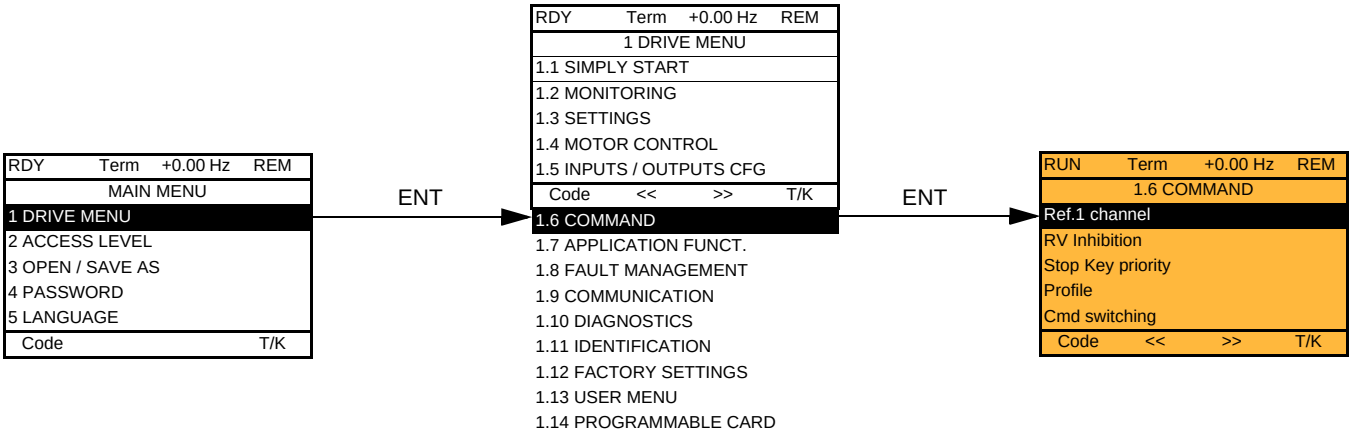

With integrated display terminal:

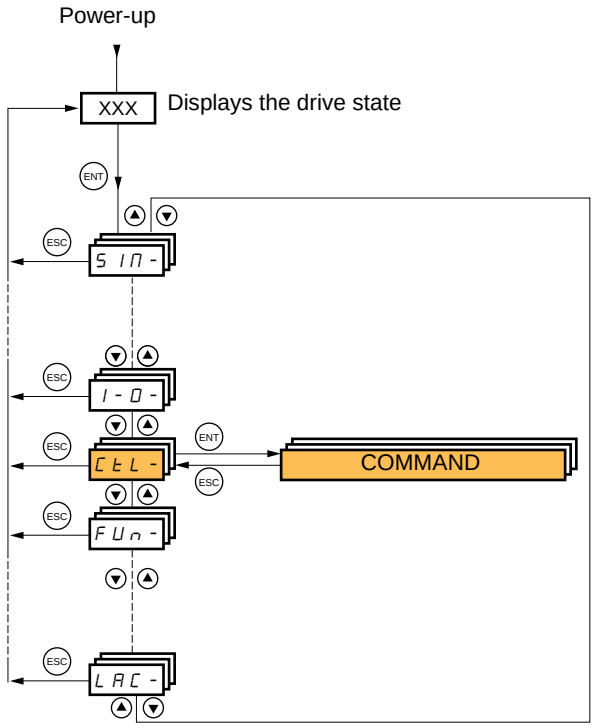

The parameters in the [1.6 COMMAND] (CtL) menu can only be modified when the drive is stopped and no run command is present.

Command and reference channels

Run commands (forward, reverse, stop, etc.) and references can be sent using the following channels:

Command	Reference
• Terminals: Logic inputs LI • Graphic display terminal • Integrated Modbus • Integrated CANopen • Communication card • Controller Inside card	• Terminals: Analog inputs AI, frequency input, encoder • Graphic display terminal • Integrated Modbus • Integrated CANopen • Communication card • Controller Inside card • +/- speed via the terminals • +/- speed via the graphic display terminal

The behavior of the Altivar 61 can be adapted according to requirements:

- [8 serie] (SE8): To replace an Altivar 58. See the Migration Manual.
- [Not separ.] (SIM): Command and reference are sent via the same channel.
- [Separate] (SEP): Command and reference may be sent via different channels.

In these configurations, control via the communication bus is performed in accordance with the DRIVECOM standard with only 5 freely-assignable bits (see Communication Parameters Manual). The application functions cannot be accessed via the communication interface.

- [I/O profile] (IO): Command and reference may be sent via different channels. This configuration both simplifies and extends use via the communication interface.
  Commands may be sent via the logic inputs on the terminals or via the communication bus.
  When commands are sent via a bus, they are available on a word, which acts as virtual terminals containing only logic inputs.
  Application functions can be assigned to the bits in this word. More than one function can be assigned to the same bit.

☞ **Note:** Stop commands from the terminals remain active even if the terminals are not the active command channel.

☞ **Note:** The integrated Modbus channel has 2 physical communication ports:
- The Modbus network port
- The Modbus HMI port

The drive does not differentiate between these two ports, but recognizes the graphic display terminal irrespective of the port to which it is connected.

Reference channel for [Not separ.] (SIM), [Separate] (SEP) and [I/O profile] (IO) configurations, PID not configured

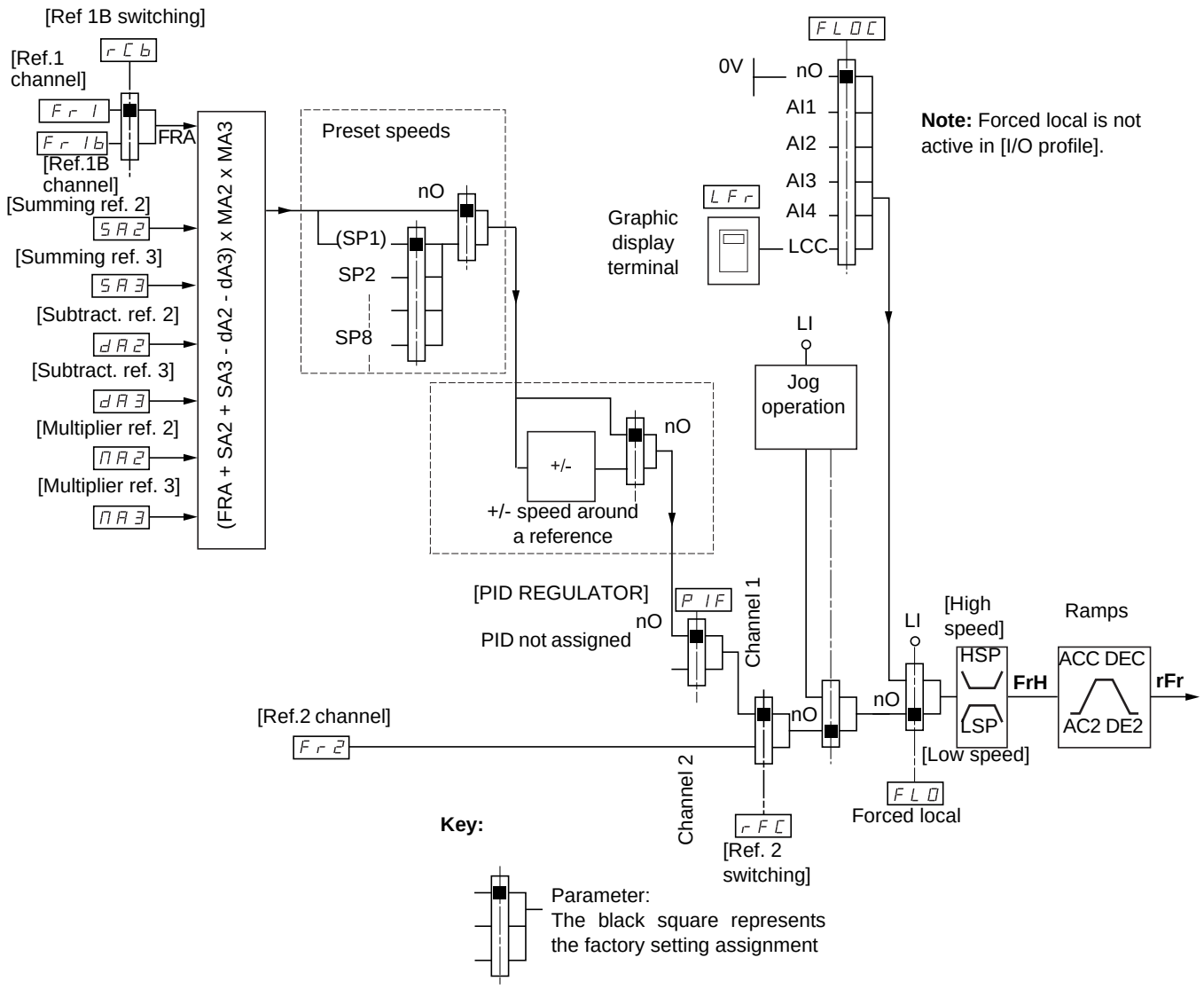

References

Fr1, SA2, SA3, dA2, dA3, MA2, MA3:

- Terminals, graphic display terminal, integrated Modbus, integrated CANopen, communication card, Controller Inside card

Fr1b, for SEP and IO:

- Terminals, graphic display terminal, integrated Modbus, integrated CANopen, communication card, Controller Inside card

Fr1b, for SIM:

- Terminals, only accessible if Fr1 = terminals

Fr2:

- Terminals, graphic display terminal, integrated Modbus, integrated CANopen, communication card, Controller Inside card, **and +/-speed**

Note: [Ref.1B channel] (Fr1b) and [Ref 1B switching] (rCb) must be configured in the [APPLICATION FUNCT.] (Fun-) menu.

Reference channel for [Not separ.] (SIM), [Separate] (SEP) and [I/O profile] (IO) configurations, PID configured with PID references at the terminals

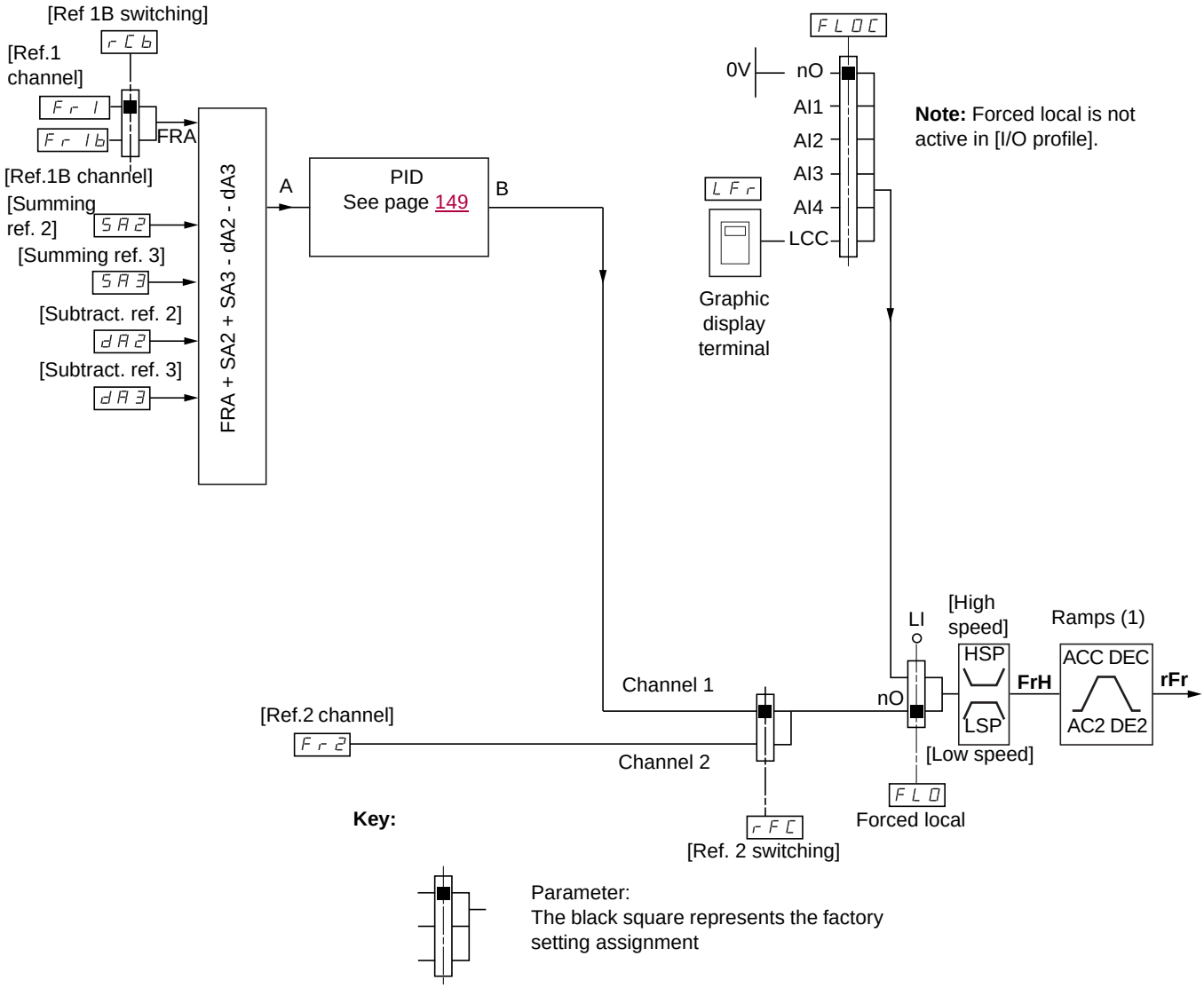

References

Fr1:

- Terminals, graphic display terminal, integrated Modbus, integrated CANopen, communication card, Controller Inside card

Fr1b, for SEP and IO:

- Terminals, graphic display terminal, integrated Modbus, integrated CANopen, communication card, Controller Inside card

Fr1b, for SIM:

- Terminals, only accessible if Fr1 = terminals

SA2, SA3, dA2, dA3:

- Terminals only

Fr2:

- Terminals, graphic display terminal, integrated Modbus, integrated CANopen, communication card, Controller Inside card, **and +/- speed**

(1) Ramps not active if the PID function is active in automatic mode.

Note: [Ref.1B channel] (Fr1b) and [Ref 1B switching] (rCb) must be configured in the [APPLICATION FUNCT.] (Fun-) menu.

Command channel for [Not separ.] (SIM) configuration

Reference and command, not separate

The command channel is determined by the reference channel. Parameters Fr1, Fr2, rFC, FLO and FLOC are common to reference and command.

Example: If the reference is Fr1 = AI1 (analog input at the terminals), control is via LI (logic input at the terminals).

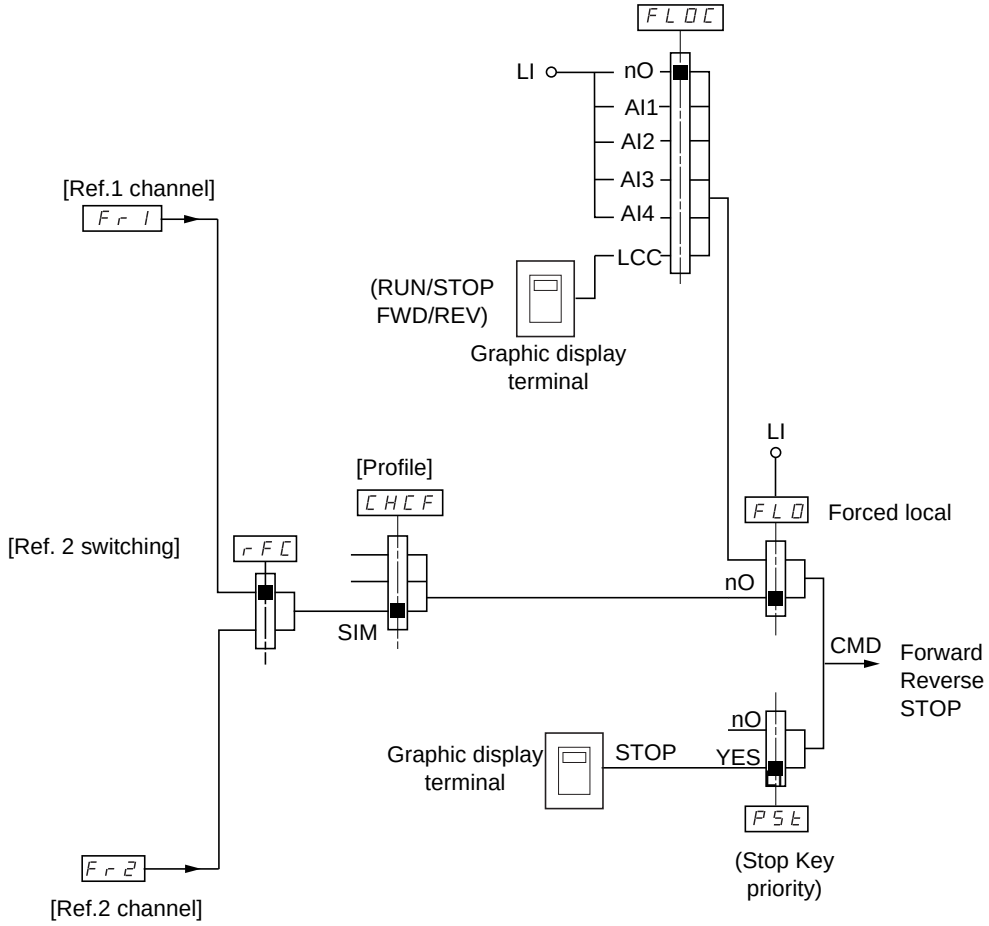

Key:

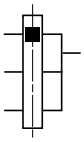

Parameter:
The black square represents
the factory setting assignment.

Command channel for [Separate] (SEP) configuration

Separate reference and command

Parameters FLO and FLOC are common to reference and command.

Example: If the reference is in forced local mode via AI1 (analog input at the terminals), command in forced local mode is via LI (logic input at the terminals).

The command channels Cd1 and Cd2 are independent of the reference channels Fr1, Fr1b and Fr2.

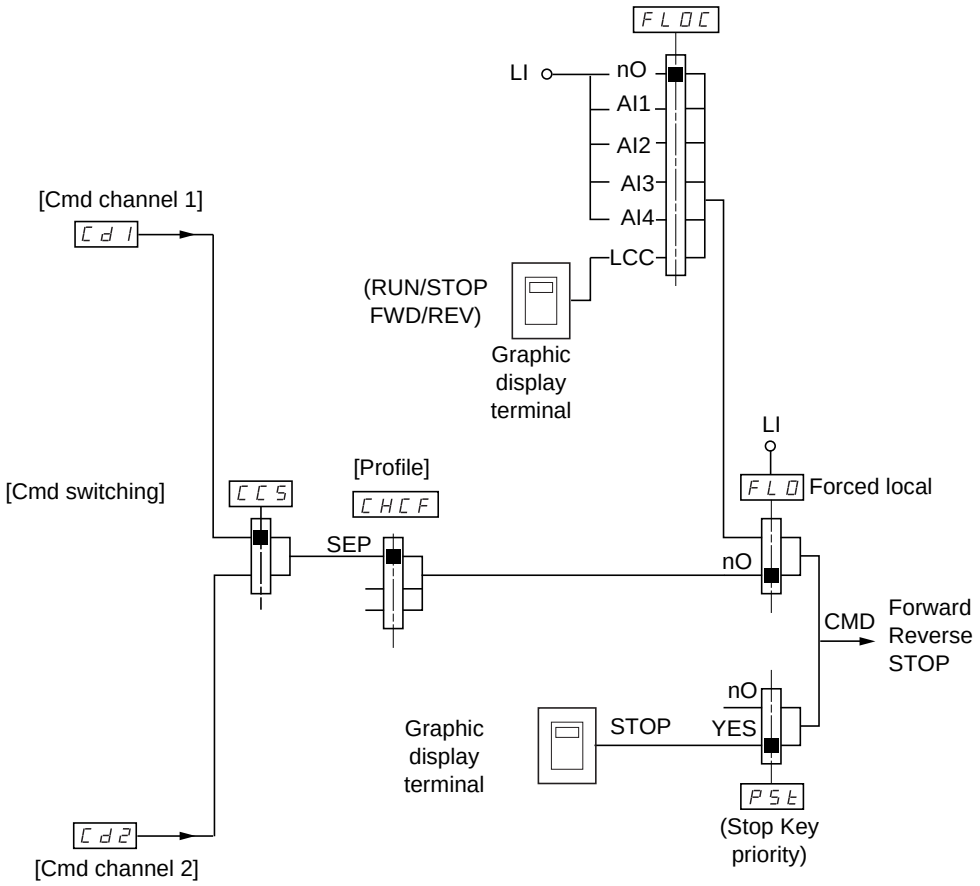

Key:

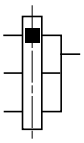

Parameter:
The black rectangle represents the factory setting assignment, except for [Profile].

Commands

Cd1, Cd2:

- Terminals, graphic display terminal, integrated Modbus, integrated CANopen, communication card, Controller Inside card

Command channel for [I/O profile] (IO) configuration

Separate reference and command, as in [Separate] (SEP) configuration

The command channels Cd1 and Cd2 are independent of the reference channels Fr1, Fr1b and Fr2.

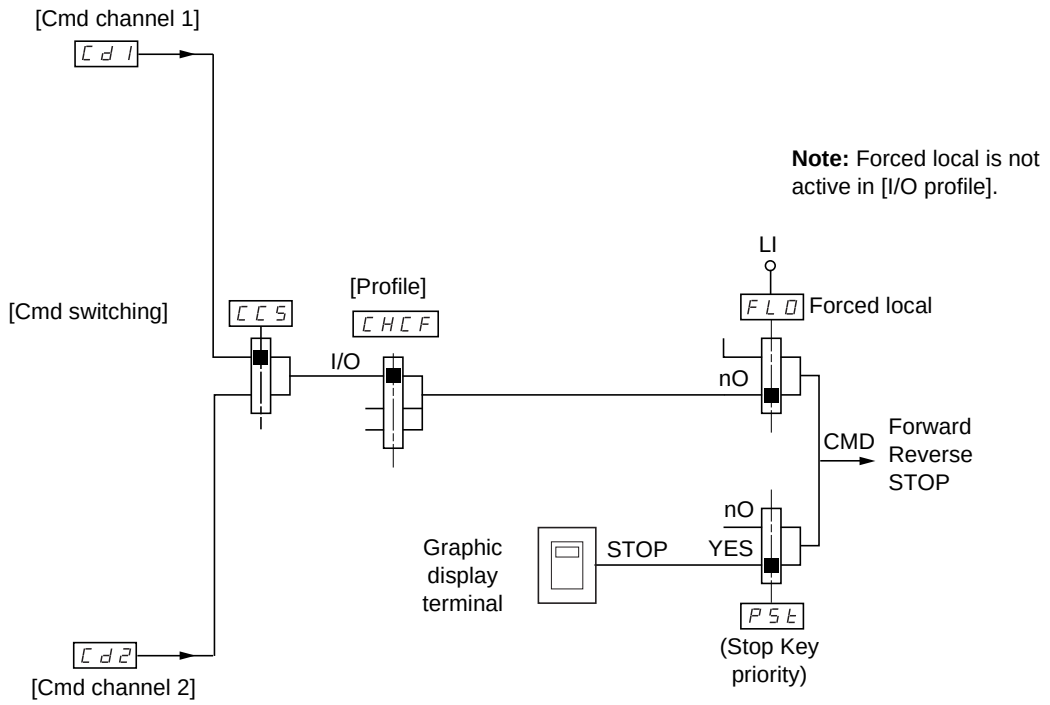

Key:

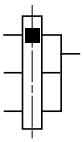

Parameter:
The black rectangle represents the factory setting assignment, except for [Profile].

Commands

Cd1, Cd2:

- Terminals, graphic display terminal, integrated Modbus, integrated CANopen, communication card, Controller Inside card

Command channel for [I/O profile] (IO) configuration

Selection of a command channel:

A command or an action can be assigned:

- To a fixed channel by selecting an LI input or a Cxxx bit:
  - By selecting e.g., LI3, this action will always be triggered by LI3 regardless of which command channel is switched.
  - By selecting e.g., C214, this action will always be triggered by integrated CANopen with bit 14 regardless of which command channel is switched.

- To a switchable channel by selecting a CDxx bit:
  - By selecting, e.g., CD11, this action will be triggered by
    LI12 if the terminals channel is active
    C111 if the integrated Modbus channel is active
    C211 if the integrated CANopen channel is active
    C311 if the communication card channel is active
    C411 if the Controller Inside card channel is active

If the active channel is the graphic display terminal, the functions and commands assigned to CDxx switchable internal bits are inactive.

Note:

- CD14 and CD15 can only be used for switching between 2 networks. They do not have equivalent logic inputs.

Terminals	Integrated Modbus	Integrated CANopen	Communication card	Controller Inside card	Internal bit, can be switched
					CD00
LI2 (1)	C101 (1)	C201 (1)	C301 (1)	C401 (1)	CD01
LI3	C102	C202	C302	C402	CD02
LI4	C103	C203	C303	C403	CD03
LI5	C104	C204	C304	C404	CD04
LI6	C105	C205	C305	C405	CD05
LI7	C106	C206	C306	C406	CD06
LI8	C107	C207	C307	C407	CD07
LI9	C108	C208	C308	C408	CD08
LI10	C109	C209	C309	C409	CD09
LI11	C110	C210	C310	C410	CD10
LI12	C111	C211	C311	C411	CD11
LI13	C112	C212	C312	C412	CD12
LI14	C113	C213	C313	C413	CD13
-	C114	C214	C314	C414	CD14
-	C115	C215	C315	C415	CD15

(1) If [2/3 wire control] (tCC) page 82 = [3 wire] (3C), LI2, C101, C201, C301, and C401 cannot be accessed.

Assignment conditions for logic inputs and control bits

The following elements are available for every command or function that can be assigned to a logic input or a control bit:

[LI1] (LI1) to [LI6] (LI6)	Drive with or without option
[LI7] (LI7) to [LI10] (LI10)	With VW3A3201 logic I/O card
[LI11] (LI11) to [LI14] (LI14)	With VW3A3202 extended I/O card
[C101] (C101) to [C110] (C110)	With integrated Modbus in [I/O profile] (IO) configuration
[C111] (C111) to [C115] (C115)	With integrated Modbus regardless of configuration
[C201] (C201) to [C210] (C210)	With integrated CANopen in [I/O profile] (IO) configuration
[C211] (C211) to [C215] (C215)	With integrated CANopen regardless of configuration
[C301] (C301) to [C310] (C310)	With a communication card in [I/O profile] (IO) configuration
[C311] (C311) to [C315] (C315)	With a communication card regardless of configuration
[C401] (C401) to [C410] (C410)	With Controller Inside card in [I/O profile] (IO) configuration
[C411] (C411) to [C415] (C415)	With Controller Inside card regardless of configuration
[CD00] (Cd00) to [CD10] (Cd10)	In [I/O profile] (IO) configuration
[CD11] (Cd11) to [CD15] (Cd15)	Regardless of configuration

Note: In [I/O profile] (IO) configuration, LI1 cannot be accessed and if [2/3 wire control] (tCC) page 82 = [3 wire] (3C), LI2, C101, C201, C301, and C401 cannot be accessed either.

WARNING

UNINTENDED EQUIPMENT OPERATION

Inactive communication channels are not monitored (no lock following malfunction in the event of a communication bus failure). Make sure that the commands and functions assigned to bits C101 to C415 will not pose a risk in the event of the failure of the associated communication bus.

Failure to follow these instructions can result in death or serious injury.

Code	Name/Description	Adjustment range	Factory setting
Fr1	❑ **[Ref.1 channel]** ☐ **[AI1]** (AI1): Analog input ☐ **[AI2]** (AI2): Analog input ☐ **[AI3]** (AI3): Analog input, if VW3A3202 extension card has been inserted ☐ **[AI4]** (AI4): Analog input, if VW3A3202 extension card has been inserted ☐ **[HMI]** (LCC): Graphic display terminal ☐ **[Modbus]** (Mdb): Integrated Modbus ☐ **[CANopen]** (CAn): Integrated CANopen ☐ **[Com. card]** (nEt): Communication card (if inserted) ☐ **[Prog. card]** (APP): Controller Inside card (if inserted) ☐ **[RP]** (PI): Frequency input, if VW3A3202 extension card has been inserted ☐ **[Encoder]** (PG): Encoder input, if encoder card has been inserted		[AI1] (AI1)
rIn	❑ **[RV Inhibition]** ☐ **[No]** (nO) ☐ **[Yes]** (YES) Inhibition of movement in reverse direction, does not apply to direction requests sent by logic inputs. - Reverse direction requests sent by logic inputs are taken into account. - Reverse direction requests sent by the graphic display terminal are not taken into account. - Reverse direction requests sent by the line are not taken into account. - Any reverse speed reference originating from the PID, summing input, etc., will stop the motor.		[No] (nO)
PSt	❑ **[Stop Key priority]** ☐ **[No]** (nO) ☐ **[Yes]** (YES): Gives priority to the STOP key on the graphic display terminal when the graphic display terminal is not enabled as the command channel. Press and hold down ENT for 2 seconds in order for any change in the assignment of [Stop Key priority] (PSt) to be taken into account. This will be a freewheel stop. If the active command channel is the graphic display terminal, the stop will be performed according to the [Type of stop] (Stt) page 135 irrespective of the configuration of [Stop Key priority] (PSt).		[Yes] (YES)
CHCF	❑ **[Profile]** ☐ **[8 serie]** (SE8): ATV38 interchangeability (see Migration Manual). The [8 serie] (SE8) configuration is used to load, via PC-Software, for example, an ATV38 drive configuration in an ATV61 that has already been set to this configuration. This assignment cannot be accessed if a Controller Inside card has been inserted. ☞ **Note:** Modifications to the configuration of the ATV61 must only be made using PC-Software when it is in this configuration, otherwise operation cannot be guaranteed. ☐ **[Not separ.]** (SIM): Reference and command, not separate ☐ **[Separate]** (SEP): Separate reference and command This assignment cannot be accessed in [I/O profile] (IO). ☐ **[I/O profile]** (IO): I/O profile When [8 serie] (SE8) is selected and [I/O profile] (IO) is deselected, the drive automatically returns to the factory setting (this is mandatory). This factory setting only affects the [1 DRIVE MENU] menu. It does not affect either [1.9 COMMUNICATION] or [1.14 PROGRAMMABLE CARD]. - With the graphic display terminal, a screen appears to perform this operation. Follow the instructions on the screen. - With the integrated display terminal, press ENT and hold it down (for 2 s). This will save the selection and return to the factory setting.		[Not separ.] (SIM)

Code	Name/Description	Adjustment range	Factory setting
CCS	❑ **[Cmd switching]** The parameter can be accessed if [Profile] (CHCF) = [Separate] (SEP) or [I/O profile] (IO) ☐ **[ch1 active]** (Cd1): [Cmd channel 1] (Cd1) active (no switching) ☐ **[ch2 active]** (Cd2): [Cmd channel 2] (Cd2) active (no switching) ☐ **[LI1]** (LI1) : : ☐ **[...]** (...): See the assignment conditions on page 118 (not CDOO to CD14). If the assigned input or bit is at 0, channel [Cmd channel 1] (Cd1) is active. If the assigned input or bit is at 1, channel [Cmd channel 2] (Cd2) is active.		[ch1 active] (Cd1)
Cd1	❑ **[Cmd channel 1]** ☐ **[Terminals]** (tEr): Terminals ☐ **[HMI]** (LCC): Graphic display terminal ☐ **[Modbus]** (Mdb): Integrated Modbus ☐ **[CANopen]** (CAn): Integrated CANopen ☐ **[Com. card]** (nEt): Communication card (if inserted) ☐ **[Prog. card]** (APP): Controller Inside card (if inserted) The parameter is available if [Profile] (CHCF) = [Separate] (SEP) or [I/O profile] (IO).		[Terminals] (tEr)
Cd2	❑ **[Cmd channel 2]** ☐ **[Terminals]** (tEr): Terminals ☐ **[HMI]** (LCC): Graphic display terminal ☐ **[Modbus]** (Mdb): Integrated Modbus ☐ **[CANopen]** (CAn): Integrated CANopen ☐ **[Com. card]** (nEt): Communication card (if inserted) ☐ **[Prog. card]** (APP): Controller Inside card (if inserted) The parameter is available if [Profile] (CHCF) = [Separate] (SEP) or [I/O profile] (IO).		[Modbus] (Mdb)
rFC	❑ **[Ref. 2 switching]** ☐ **[ch1 active]** (Fr1): No switching, [Ref.1 channel] (Fr1) active ☐ **[ch2 active]** (Fr2): No switching, [Ref.2 channel] (Fr2) active ☐ **[LI1]** (LI1) : : ☐ **[...]** (...): See the assignment conditions on page 118 (not CDOO to CD14). If the assigned input or bit is at 0, channel [Ref.1 channel] (Fr1) is active. If the assigned bit or input is at 1, channel [Ref.2 channel] (Fr2) is active.		[ch1 active] (Fr1)
Fr2	❑ **[Ref.2 channel]** ☐ **[No]** (nO): Not assigned If [Profile] (CHCF) = [Not separ.] (SIM), command is at the terminals with a zero reference. If [Profile] (CHCF) = [Separate] (SEP) or [I/O profile] (IO), the reference is zero. ☐ **[AI1]** (AI1): Analog input ☐ **[AI2]** (AI2): Analog input ☐ **[AI3]** (AI3): Analog input, if VW3A3202 extension card has been inserted ☐ **[AI4]** (AI4): Analog input, if VW3A3202 extension card has been inserted ☐ **[+/- Speed]** (UPdt): +/-Speed command ☐ **[HMI]** (LCC): Graphic display terminal ☐ **[Modbus]** (Mdb): Integrated Modbus ☐ **[CANopen]** (CAn): Integrated CANopen ☐ **[Com. card]** (nEt): Communication card (if inserted) ☐ **[Prog. card]** (APP): Controller Inside card (if inserted) ☐ **[RP]** (PI): Frequency input, if VW3A3202 extension card has been inserted ☐ **[Encoder]** (PG): Encoder input, if encoder card has been inserted		[No] (nO)

Code	Name/Description	Adjustment range	Factory setting
COP	❑ **[Copy channel 1 <> 2]** Can be used to copy the current reference and/or the command by means of switching, in order to avoid speed surges, for example. If [Profile] (CHCF) page 119 = [Not separ.] (SIM) or [Separate] (SEP), copying will only be possible from channel 1 to channel 2. If [Profile] (CHCF) = [I/O profile] (IO), copying will be possible in both directions. nO ☐ **[No]** (nO): No copy SP ☐ **[Reference]** (SP): Copy reference Cd ☐ **[Command]** (Cd): Copy command ALL ☐ **[Cmd + ref.]** (ALL): Copy command and reference - A reference or a command cannot be copied to a channel on the terminals. - The reference copied is FrH (before ramp) unless the destination channel reference is set via +/- speed. In this case, the reference copied is rFr (after ramp). ⚠ **WARNING** **UNINTENDED EQUIPMENT OPERATION** Copying the command and/or reference can change the direction of rotation. Check that this is safe. **Failure to follow these instructions can result in death or serious injury.**		[No] (nO)

As the graphic display terminal may be selected as the command and/or reference channel, its action modes can be configured.
The parameters on this page can only be accessed on the graphic display terminal, and not on the integrated display terminal.

Notes:

- The display terminal command/reference is only active if the command and/or reference channels from the terminal are active, with the exception of [T/K] (command and reference via the display terminal), which takes priority over these channels. Press [T/K] again or turn off the drive to revert control to the selected channel.
  - **•Note:** The channel selected by pressing [T/K] remains active after a return to factory settings, until [T/K] is pressed again or the drive is turned off.
- Command and reference via the display terminal are impossible if the latter is connected to more than one drive.
- The JOG, preset speed and +/- speed functions can only be accessed if [Profile] (CHCF) = [Not separ.] (SIM).
- The preset PID reference functions can only be accessed if [Profile] (CHCF) = [Not separ.] (SIM) or [Separate] (SEP).
- The [T/K] function (command and reference via the display terminal) can be accessed regardless of the [Profile] (CHCF).

Name/Description	Adjustment range	Factory setting
❑ [F1 key assignment] ☐ **[No]**: Not assigned ☐ **[Jog]**: JOG operation ☐ **[Preset spd2]**: Press the key to run the drive at the 2nd preset speed [Preset speed 2] (SP2) page 142. Press STOP to stop the drive. ☐ **[Preset spd3]**: Press the key to run the drive at the 3rd preset speed [Preset speed 3] (SP3) page 142. Press STOP to stop the drive. ☐ **[PID ref. 2]**: Sets a PID reference equal to the 2nd preset PID reference [Preset ref. PID 2] (rP2) page 158 without sending a run command. Only operates if [Ref.1 channel] (Fr1) = [HMI] (LCC). Does not operate with the [T/K] function. ☐ **[PID ref. 3]**: Sets a PID reference equal to the 3rd preset PID reference [Preset ref. PID 3] (rP3) page 158 without sending a run command. Only operates if [Ref.1 channel] (Fr1) = [HMI] (LCC). Does not operate with the [T/K] function. ☐ **[+Speed]**: Faster, only operates if [Ref.2 channel] (Fr2) = [HMI] (LCC). Press the key to run the drive and increase the speed. Press STOP to stop the drive. ☐ **[-Speed]**: Slower, only operates if [Ref.2 channel] (Fr2) = [HMI] (LCC) and if a different key is assigned to [+Speed]. Press the key to run the drive and decrease the speed. Press STOP to stop the drive. ☐ **[T/K]**: Command and reference via the display terminal: Takes priority over [Cmd switching] (CCS) and over [Ref. 2 switching] (rFC).		[No]
❑ [F2 key assignment] Identical to [F1 key assignment].		[No]
❑ [F3 key assignment] Identical to [F1 key assignment].		[No]
❑ [F4 key assignment] Identical to [F1 key assignment].		[T/K]
❑ [HMI cmd.] When the [T/K] function is assigned to a key and that function is active, this parameter defines the behavior at the moment when control returns to the graphic display terminal. ☐ **[Stop]**: Stops the drive (although the controlled direction of operation and reference of the previous channel are copied (to be taken into account on the next RUN command)). ☐ **[Bumpless]**: Does not stop the drive (the controlled direction of operation and the reference of the previous channel are copied).		[Bumpless]

With graphic display terminal:

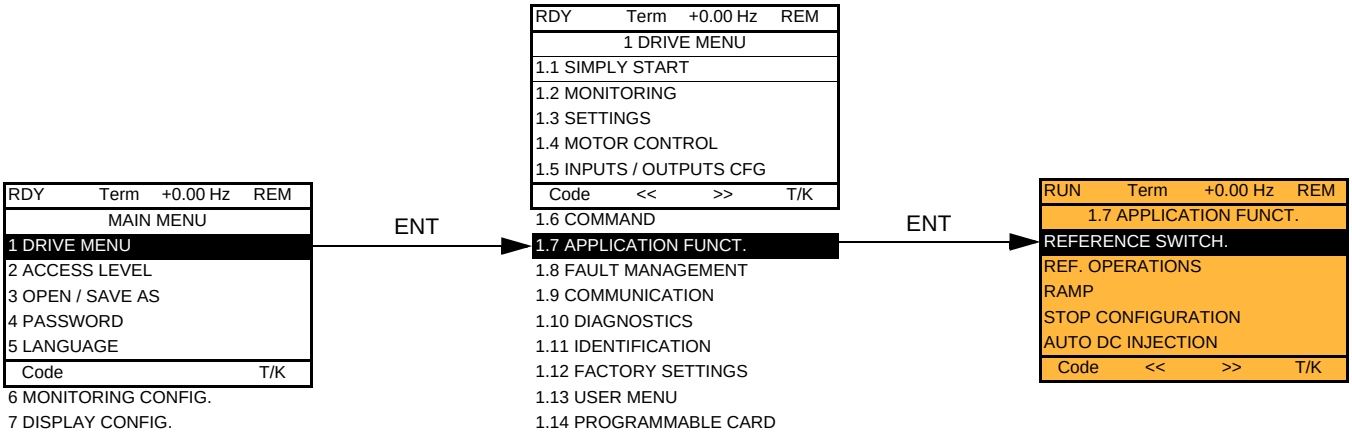

With integrated display terminal:

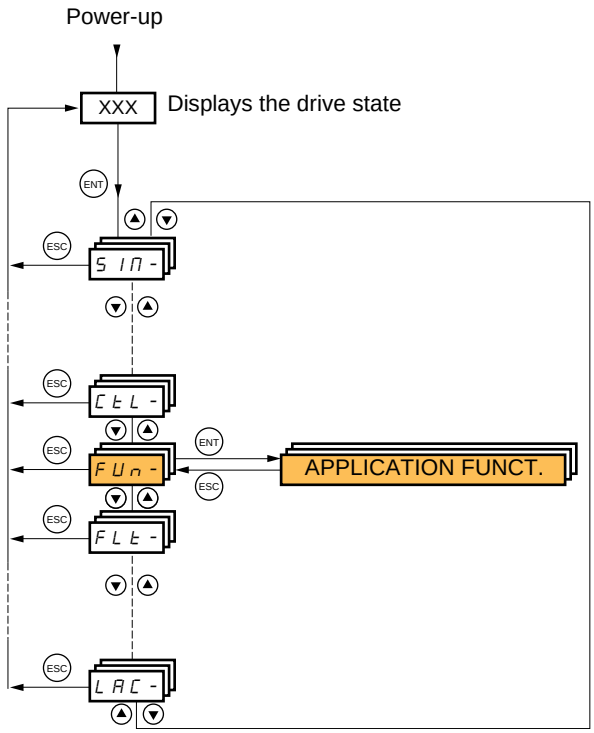

Summary of functions:

Code	Name	Page
rEF-	[REFERENCE SWITCH.]	129
OAI-	[REF. OPERATIONS]	130
rPt-	[RAMP]	131
Stt-	[STOP CONFIGURATION]	135
AdC-	[AUTO DC INJECTION]	137
JOG-	[JOG]	139
PSS-	[PRESET SPEEDS]	141
UPd-	[+/-Speed]	144
SrE-	[+/-SPEED AROUND REF.]	146
SPM-	[MEMO REFERENCE]	147
FLI-	[FLUXING BY LI]	148
PId-	[PID REGULATOR]	153
PrI-	[PID PRESET REFERENCES]	158
SrM-	[SLEEPING / WAKE UP]	160
tOL-	[TORQUE LIMITATION]	166
CLI-	[2nd CURRENT LIMIT.]	168
LLC-	[LINE CONTACTOR COMMAND]	170
OCC-	[OUTPUT CONTACTOR CMD]	172
dAM-	[DAMPER MANAGEMENT]	174
MLP-	[PARAM. SET SWITCHING]	176
MMC-	[MULTIMOTORS/CONFIG.]	181
tnL-	[AUTO TUNING BY LI]	181
nFS-	[NO FLOW DETECTION]	183
FLL-	[FLOW LIMITATION]	185
dCO-	[DC BUS SUPPLY]	186
AFE-	[REGEN CONNECTION]	187

[1.7 APPLICATION FUNCT.] (FUn-)

The parameters in the [1.7 APPLICATION FUNCT.] (FUn-) menu can only be modified when the drive is stopped and there is no run command, except for parameters with a ↻ symbol in the code column, which can be modified with the drive running or stopped.

☞ **Note: Compatibility of functions**
The choice of application functions may be limited by the number of I/O and by the fact that some functions are incompatible with one another. Functions that are not listed in the table below are fully compatible.
If there is an incompatibility between functions, the first function configured will prevent the others being configured.

Each of the functions on the following pages can be assigned to one of the inputs or outputs.
A single input can activate several functions at the same time (reverse and 2nd ramp, for example). **The user must therefore ensure that these functions can be used at the same time**. It is only possible to assign one input to several functions at [Advanced] (AdU) and [Expert] (EPr) level.

Before assigning a command, reference or function to an input or output, the user must make sure that this input or output has not already been assigned and that another input or output has not been assigned to an incompatible or undesirable function.
The drive factory setting or macro configurations automatically configure functions, **which may prevent other functions being assigned. It may be necessary to unconfigure one or more functions in order to be able to enable another.** Check the compatibility table below.

Compatibility table

	Ref. operations (page 130)	+/- speed (2) (page 144)	Preset speeds (page 141)	PID regulator (page 153)	JOG operation (page 139)	DC injection stop (page 135)	Fast stop (page 135)	Freewheel stop (page 135)	+/- speed around a reference (page 146)	Synchronous motor (page 69)
Ref. operations (page 130)			↑	●(3)	↑					
+/- speed (2) (page 144)					●					
Preset speeds (page 141)	←				↑					
PID regulator (page 153)	●(3)				●				●	
JOG operation (page 139)	←	●	←	●					●	
DC injection stop (page 135)							●(1)	↑		●
Fast stop (page 135)						●(1)		↑		
Freewheel stop (page 135)						←	←			
+/- speed around a reference (page 146)				●	●					
Synchronous motor (page 69)						●				

(1) Priority is given to the first of these two stop modes to be activated.
(2) Excluding special application with reference channel Fr2 (see diagrams on pages 112 and 113).
(3) Only the multiplier reference is incompatible with the PID regulator.

● Incompatible functions Compatible functions N/A

Priority functions (functions, which cannot be active at the same time):

← ↑ The function marked with the arrow takes priority over the other.

Stop functions have priority over run commands.
Speed references via logic command have priority over analog references.

☞ **Note:** This compatibility table does not affect commands that can be assigned to the keys of the graphic display terminal (see page 122).

Incompatible functions

The following functions will be inaccessible or deactivated in the cases described below:

Automatic restart

This is only possible for control type [2/3 wire control] (tCC) = [2 wire] (2C) and [2 wire type] (tCt) = [Level] (LEL) or [Fwd priority] (PFO). See page 82.

Catch on the fly

This is only possible for control type [2/3 wire control] (tCC) = [2 wire] (2C) and [2 wire type] (tCt) = [Level] (LEL) or [Fwd priority] (PFO). See page 82.
This function is locked if automatic injection on stop [Auto DC injection] (AdC) = [Continuous] (Ct). See page 137.

The SUP- monitoring menu (page 39) can be used to display the functions assigned to each input in order to check their compatibility.

When a function is assigned, a ✓ appears on the graphic display terminal, as illustrated in the example below:

```
RDY        Term    +0.00 Hz    REM
      1.7 APPLICATION FUNCT.
REFERENCE SWITCH.
REF. OPERATIONS
RAMP                            ✓
STOP CONFIGURATION
AUTO DC INJECTION
 Code        <<        >>       T/K
JOG
```

If you attempt to assign a function that is incompatible with another function that has already been assigned, an alarm message will appear:

With the graphic display terminal

```
RDY        Term    +0.00 Hz    REM
          INCOMPATIBILITY
The function can't be assigned
because an incompatible
function is already selected. See
programming book.
ENT or ESC to continue
```

With the integrated display terminal:
COMP flashes until ENT or ESC is pressed.

When you assign a logic input, an analog input, a reference channel or a bit to a function, pressing the HELP button will display the functions that may already have been activated by this input, bit or channel.

When a logic input, an analog input, a reference channel or a bit that has already been assigned is assigned to another function, the following screens appear:

With the graphic display terminal

```
RUN   +50.00 Hz   1250A  +50.00 Hz
      WARNING - ASSIGNED TO
Reference switch. 2

ENT->Continue        ESC->Cancel
```

If the access level permits this new assignment, pressing ENT confirms the assignment.
If the access level does not permit this new assignment, pressing ENT results in the following display.

```
RUN   +50.00 Hz   1250A  +50.00 Hz
      ASSIGNMENT FORBIDDEN
Un-assign the present
functions, or select
Advanced access level
```

With the integrated display terminal:

The code for the first function, which is already assigned, is displayed flashing.
If the access level permits this new assignment, pressing ENT confirms the assignment.
If the access level does not permit this new assignment, pressing ENT has no effect, and the message continues to flash. It is only possible to exit by pressing ESC.

Summing input/Subtracting input/Multiplier

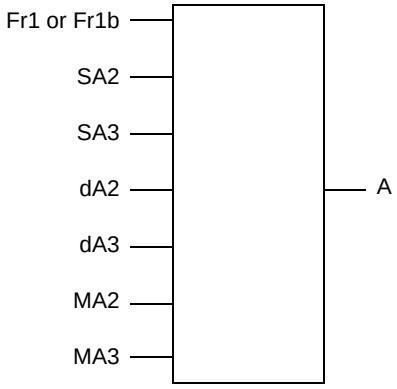

A = (Fr1 or Fr1b + SA2 + SA3 - dA2 - dA3) x MA2 x MA3

- If SA2, SA3, dA2, dA3 are not assigned, they are set to 0.
- If MA2, MA3 are not assigned, they are set to 1.
- A is limited by the minimum LSP and maximum HSP parameters.
- For multiplication, the signal on MA2 or MA3 is interpreted as a %; 100% corresponds to the maximum value of the corresponding input. If MA2 or MA3 is sent via the communication bus or graphic display terminal, an MFr multiplication variable (see page 45) must be sent via the bus or graphic display terminal.
- Reversal of the direction of operation in the event of a negative result can be inhibited (see page 119).

Code	Name/Description	Adjustment range	Factory setting
rEF-	**[REFERENCE SWITCH.]**		
rCb	**[Ref 1B switching]** See the diagrams on pages 112 and 113. ☐ **[ch1 active]** (Fr1): No switching, [Ref.1 channel] (Fr1) active ☐ **[ch1B active]** (Fr1b): No switching, [Ref.1B channel] (Fr1b) active ☐ **[LI1]** (LI1) : : ☐ **[...]** (...): See the assignment conditions on page 118 (not CDOO to CD14). • If the assigned input or bit is at 0, [Ref.1 channel] (Fr1) is active (see page 119). • If the assigned input or bit is at 1, [Ref.1B channel] (Fr1b) is active. [Ref 1B switching] (rCb) is forced to [ch1 active] (Fr1) if [Profile] (CHCF) = [Not separ.] (SIM) with [Ref.1 channel] (Fr1) assigned via the terminals (analog inputs, encoder, pulse input); see page 119.		[LI3] (LI3)
Fr1b	**[Ref.1B channel]** ☐ **[No]** (nO): Not assigned ☐ **[AI1]** (AI1): Analog input ☐ **[AI2]** (AI2): Analog input ☐ **[AI3]** (AI3): Analog input, if VW3A3202 extension card has been inserted ☐ **[AI4]** (AI4): Analog input, if VW3A3202 extension card has been inserted ☐ **[HMI]** (LCC): Graphic display terminal ☐ **[Modbus]** (Mdb): Integrated Modbus ☐ **[CANopen]** (CAn): Integrated CANopen ☐ **[Com. card]** (nEt): Communication card (if inserted) ☐ **[Prog. card]** (APP): Controller Inside card (if inserted) ☐ **[RP]** (PI): Frequency input, if VW3A3202 extension card has been inserted ☐ **[Encoder]** (PG): Encoder input, if encoder card has been inserted **Note**: In the following instances, only assignments via the terminals are possible: - [Profile] (CHCF) = [Not separ.] (SIM) with [Ref.1 channel] (Fr1) assigned via the terminals (analog inputs, encoder, pulse input); see page 119. - PID configured with PID references via the terminals		[AI2] (AI2)

Code	Name/Description	Adjustment range	Factory setting
OA1-	**[REF. OPERATIONS]** Reference = (Fr1 or Fr1b + SA2 + SA3 - dA2 - dA3) x MA2 x MA3. See the diagrams on pages 112 and 113. **Note:** This function cannot be used with certain other functions. Follow the instructions on page 124.		
SA2	**[Summing ref. 2]** Selection of a reference to be added to [Ref.1 channel] (Fr1) or [Ref.1B channel] (Fr1b). nO ☐ **[No]** (nO): No source assigned AI1 ☐ **[AI1]** (AI1): Analog input AI2 ☐ **[AI2]** (AI2): Analog input AI3 ☐ **[AI3]** (AI3): Analog input, if VW3A3202 extension card has been inserted AI4 ☐ **[AI4]** (AI4): Analog input, if VW3A3202 extension card has been inserted LCC ☐ **[HMI]** (LCC): Graphic display terminal Mdb ☐ **[Modbus]** (Mdb): Integrated Modbus CAn ☐ **[CANopen]** (CAn): Integrated CANopen nEt ☐ **[Com. card]** (nEt): Communication card (if inserted) APP ☐ **[Prog. card]** (APP): Controller Inside card (if inserted) PI ☐ **[RP]** (PI): Frequency input, if VW3A3202 extension card has been inserted PG ☐ **[Encoder]** (PG): Encoder input, if encoder card has been inserted AIU1 ☐ **[Network AI]** (AIU1): Virtual input via communication bus, to be configured via [AI net. channel] (AIC1) page 91 **WARNING** **UNINTENDED EQUIPMENT OPERATION** If the equipment switches to forced local mode (see page 218), the virtual input remains frozen at the last value transmitted. Do not use the virtual input and forced local mode in the same configuration. **Failure to follow this instruction can result in death or serious injury.**		[No] (nO)
SA3	**[Summing ref. 3]** Selection of a reference to be added to [Ref.1 channel] (Fr1) or [Ref.1B channel] (Fr1b). • Possible assignments are identical to [Summing ref. 2] (SA2) above.		[No] (nO)
dA2	**[Subtract. ref. 2]** Selection of a reference to be subtracted from [Ref.1 channel] (Fr1) or [Ref.1B channel] (Fr1b). • Possible assignments are identical to [Summing ref. 2] (SA2) above.		[No] (nO)
dA3	**[Subtract. ref. 3]** Selection of a reference to be subtracted from [Ref.1 channel] (Fr1) or [Ref.1B channel] (Fr1b). • Possible assignments are identical to [Summing ref. 2] (SA2) above.		[No] (nO)
MA2	**[Multiplier ref. 2]** Selection of a multiplier reference [Ref.1 channel] (Fr1) or [Ref.1B channel] (Fr1b). • Possible assignments are identical to [Summing ref. 2] (SA2) above.		[No] (nO)
MA3	**[Multiplier ref. 3]** Selection of a multiplier reference [Ref.1 channel] (Fr1) or [Ref.1B channel] (Fr1b). • Possible assignments are identical to [Summing ref. 2] (SA2) above.		[No] (nO)

Code	Name/Description	Adjustment range	Factory setting
rPt-	**[RAMP]**		
rPt LIn S U CUS	**[Ramp type]** ☐ **[Linear]** (LIn) ☐ **[S ramp]** (S) ☐ **[U ramp]** (U) ☐ **[Customized]** (CUS) S ramps 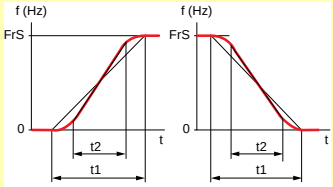 The rounding coefficient is fixed, where t2 = 0.6 x t1 and t1 = set ramp time. U ramps 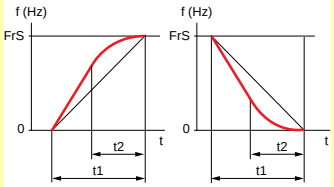 The rounding coefficient is fixed, where t2 = 0.5 x t1 and t1 = set ramp time. Customized ramps 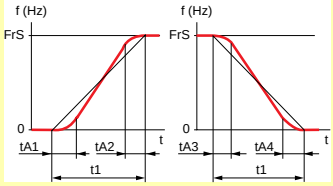 tA1: adjustable from 0 to 100% tA2: adjustable from 0 to (100% – tA1) tA3: adjustable from 0 to 100% tA4: adjustable from 0 to (100% – tA3) As a % of t1, where t1 = set ramp time		[Linear] (LIn)
Inr ( )	**[Ramp increment]** (1) ☐ **[0.01]**: Ramp up to 99.99 seconds ☐ **[0.1]**: Ramp up to 999.9 seconds ☐ **[1]**: Ramp up to 9,000 seconds This parameter is valid for [Acceleration] (ACC), [Deceleration] (dEC), [Acceleration 2] (AC2) and [Deceleration 2] (dE2).		[0.1] (0.1)
0.01 0.1 1			
ACC ( )	**[Acceleration]** (1) Time to accelerate from 0 to the [Rated motor freq.] (FrS) (page 65). Make sure that this value is compatible with the inertia being driven.	0.01 to 9,000 s (2)	3.0 s
dEC ( )	**[Deceleration]** (1) Time to decelerate from the [Rated motor freq.] (FrS) (page 65) to 0. Make sure that this value is compatible with the inertia being driven.	0.01 to 9,000 s (2)	3.0 s

(1) The parameter can also be accessed in the [1.3 SETTINGS] (SEt-) menu.
(2) Range 0.01 to 99.99 s or 0.1 to 999.9 s or 1 to 9,000 s according to [Ramp increment] (Inr).

( ) Parameter that can be modified during operation or when stopped.

Code	Name/Description	Adjustment range	Factory setting
	[RAMP] (continued)		
tA1	**[Begin Acc round]** (1) - Rounding of start of acceleration ramp as a % of the [Acceleration] (ACC) or [Acceleration 2] (AC2) ramp time. - Can be set between 0 and 100% - The parameter can be accessed if the [Ramp type] (rPt) is [Customized] (CUS).	0 to 100%	10%
tA2	**[End Acc round]** (1) - Rounding of end of acceleration ramp as a % of the [Acceleration] (ACC) or [Acceleration 2] (AC2) ramp time. - Can be set between 0 and (100% – [Begin Acc round] (tA1)) - The parameter can be accessed if the [Ramp type] (rPt) is [Customized] (CUS).		10%
tA3	**[Begin Dec round]** (1) - Rounding of start of deceleration ramp as a % of the [Deceleration] (dEC) or [Deceleration 2] (dE2) ramp time. - Can be set between 0 and 100% - The parameter can be accessed if the [Ramp type] (rPt) is [Customized] (CUS).	0 to 100%	10%
tA4	**[End Dec round]** (1) - Rounding of end of deceleration ramp as a % of the [Deceleration] (dEC) or [Deceleration 2] (dE2) ramp time. - Can be set between 0 and (100% – [Begin Dec round] (tA3)) - The parameter can be accessed if the [Ramp type] (rPt) is [Customized] (CUS).		10%

(1) The parameter can also be accessed in the [1.3 SETTINGS] (SEt-) menu.

Parameter that can be modified during operation or when stopped.

Code	Name/Description	Adjustment range	Factory setting
	[RAMP] (continued)		
Frt	**[Ramp 2 threshold]**	0 to 500 or 599 Hz according to rating	0 Hz

Ramp switching threshold
The 2nd ramp is switched if the value of Frt is not 0 (0 deactivates the function) and the output frequency is greater than Frt.
Threshold ramp switching can be combined with [Ramp switch ass.] (rPS) switching as follows:

LI or bit	Frequency	Ramp
0	<Frt	ACC, dEC
0	>Frt	AC2, dE2
1	<Frt	AC2, dE2
1	>Frt	AC2, dE2

rPS	**[Ramp switch ass.]**		[No] (nO)

- nO **[No]** (nO): Not assigned.
- LI1 **[LI1]** (LI1)
  :
  :
- - - **[...]** (...): See the assignment conditions on page 118.
  - ACC and dEC are enabled when the assigned input or bit is at 0.
  - AC2 and dE2 are enabled when the assigned input or bit is at 1.

AC2	**[Acceleration 2]** (1)	0.01 to 9,000 s (2)	5.0 s

Time to accelerate from 0 to the [Rated motor freq.] (FrS). Make sure that this value is compatible with the inertia being driven.
The parameter can be accessed if [Ramp 2 threshold] (Frt) > 0 or if [Ramp switch ass.] (rPS) is assigned.

dE2	**[Deceleration 2]** (1)	0.01 to 9,000 s (2)	5.0 s

Time to decelerate from [Rated motor freq.] (FrS) to 0. Make sure that this value is compatible with the inertia being driven.
The parameter can be accessed if [Ramp 2 threshold] (Frt) > 0 or if [Ramp switch ass.] (rPS) is assigned.

(1) The parameter can also be accessed in the [1.3 SETTINGS] (SEt-) menu.
(2) Range 0.01 to 99.99 s or 0.1 to 999.9 s or 1 to 9,000 s according to [Ramp increment] (Inr) page 131.

Parameter that can be modified during operation or when stopped.

Code	Name/Description	Adjustment range	Factory setting
brA	❑ **[Dec ramp adapt.]**		[Yes] (YES)

Activating this function automatically adapts the deceleration ramp, if this has been set at too low a value for the inertia of the load, which can cause an overvoltage fault.

nO ☐ **[No]** (nO): Function inactive

YES ☐ **[Yes]** (YES): Function active, for applications that do not require strong deceleration.

The following selections appear depending on the rating of the drive and [Motor control type] (Ctt) page 69. They enable stronger deceleration to be obtained than with [Yes] (YES). Use comparative testing to determine your selection.

When [Dec ramp adapt.] (brA) is configured on [High torq. x] (dYnx), the dynamic performances for braking are improved by the addition of a current flow component. The aim is to increase the iron loss and magnetic energy stored in the motor.

dYnA ☐ **[High torq. A]** (dYnA): Addition of a constant current flow component.

dYnb ☐ **[High torq. B]** (dYnb): Addition of a current flow component oscillating at 100 Hz.

dYnC ☐ **[High torq. C]** (dYnC): Addition of a current flow component oscillating at 200 Hz but with a greater amplitude.

[Dec ramp adapt.] (brA) is forced to [No] (nO) if [Braking balance] (bbA) page 80 = [Yes] (YES).

The function is incompatible with applications requiring:

- Positioning on a ramp
- The use of a braking resistor (the resistor would not operate correctly).

CAUTION

Do not use [High torq. A] (dYnA), [High torq. B] (dYnB) or [High torq. C] (dYnC) configurations if the motor is a permanent magnet synchronous motor, as it will be demagnetized.
Failure to follow this instruction can result in equipment damage.

Code	Name/Description	Adjustment range	Factory setting
Stt-	**[STOP CONFIGURATION]** **Note:** Some types of stop cannot be used with all other functions. Follow the instructions on page 124.		
Stt rMP FSt nSt dCI	**[Type of stop]** Stop mode on disappearance of the run command or appearance of a stop command. ☐ **[Ramp stop]** (rMP): On ramp ☐ **[Fast stop]** (FSt): Fast stop ☐ **[Freewheel]** (nSt): Freewheel stop This selection will not appear if [Motor fluxing] (FLU) page 148 = [Continuous] (FCt). ☐ **[DC injection]** (dCI): DC injection stop If the [Low speed time out] (tLS) parameter page 56 or 160 is not 0, [Type of stop] (Stt) is forced to [Ramp stop] (rMP).		[Ramp stop] (rMP)
FFt	**[Freewheel stop Thd]** (1) This parameter supports switching from a ramp stop or a fast stop to a freewheel stop below a low speed threshold. It can be accessed if [Type of stop] (Stt) = [Fast stop] (FSt) or [Ramp stop] (rMP). ☐ 0.0: Does not switch to freewheel stop ☐ 0.1 to 599 Hz: Speed threshold below which the motor will switch to freewheel stop	0.0 to 599 Hz	0.0
nSt	**[Freewheel stop ass.]** ☐ **[No]** (nO): Not assigned ☐ **[LI1]** (LI1) to **[LI6]** (LI6) ☐ **[LI7]** (LI7) to **[LI10]** (LI10): If VW3A3201 logic I/O card has been inserted ☐ **[LI11]** (LI11) to **[LI14]** (LI14s): If VW3A3202 extended I/O card has been inserted ☐ **[C101]** (C101) to **[C115]** (C115): With integrated Modbus in [I/O profile] (IO) ☐ **[C201]** (C201) to **[C215]** (C215): With integrated CANopen in [I/O profile] (IO) ☐ **[C301]** (C301) to **[C315]** (C315): With a communication card in [I/O profile] (IO) ☐ **[C401]** (C401) to **[C415]** (C415): With a Controller Inside card in [I/O profile] (IO) ☐ **[CD00]** (Cd00) to **[CD13]** (Cd13): In [I/O profile] (IO) can be switched with possible logic inputs ☐ **[CD14]** (Cd14) to **[CD15]** (Cd15): In [I/O profile] (IO) can be switched without logic inputs The stop is activated when the input or bit is at 0. If the input returns to state 1 and the run command is still active, the motor will only restart if [2/3 wire control] (tCC) page 82 = [2 wire] (2C) and [2 wire type] (tCt) = [Level] (LEL) or [Fwd priority] (PFO). If not, a new run command must be sent.		[No] (nO)
FSt	**[Fast stop assign.]** **Note:** This function cannot be used with certain other functions. Follow the instructions on page 124. ☐ **[No]** (nO): Not assigned ☐ **[LI1]** (LI1) : ☐ **[...]** (...): See the assignment conditions on page 118. The stop is activated when the input changes to 0 or the bit changes to 1(bit in [I/O profile] (IO) at 0). If the input returns to state 1 and the run command is still active, the motor will only restart if [2/3 wire control] (tCC) page 82 = [2 wire] (2C) and [2 wire type] (tCt) = [Level] (LEL) or [Fwd priority] (PFO). If not, a new run command must be sent.		[No] (nO)
dCF	**[Ramp divider]** (1) The parameter can be accessed if [Type of stop] (Stt) = [Fast stop] (FSt) and if [Fast stop assign.] (FSt) is not [No] (nO). The ramp that is enabled (dEC or dE2) is then divided by this coefficient when stop requests are sent. Value 0 corresponds to a minimum ramp time.	0 to 10	4

(1) The parameter can also be accessed in the [1.3 SETTINGS] (SEt-) menu.

Parameter that can be modified during operation or when stopped.

Code	Name/Description		Adjustment range	Factory setting
	[STOP CONFIGURATION] (continued)			
dCI nO LI1 - -	**[DC injection assign.]** **Note:** This function cannot be used with certain other functions. Follow the instructions on page 124. ☐ **[No]** (nO): Not assigned ☐ **[LI1]** (LI1) : ☐ **[...]** (...): See the assignment conditions on page 118. DC injection braking is initiated when the assigned input or bit changes to state 1. If the input returns to state 1 and the run command is still active, the motor will only restart if [2/3 wire control] (tCC) page 82 = [2 wire] (2C) and [2 wire type] (tCt) = [Level] (LEL) or [Fwd priority] (PFO). If not, a new run command must be sent.			[No] (nO)
IdC ( )	**[DC inject. level 1]** Level of DC injection braking current activated via logic input or selected as stop mode. The parameter can be accessed if [Type of stop] (Stt) = [DC injection] (dCI) or if [DC injection assign.] (dCI) is not [No] (nO). **CAUTION** Check that the motor will withstand this current without overheating. **Failure to follow these instructions can result in equipment damage.**	(1) (3)	0.1 to 1.1 or 1.2 In (2) according to rating	0.64 In (2)
tdI ( )	**[DC injection time 1]** Maximum current injection time [DC inject. level 1] (IdC). After this time the injection current becomes [DC inject. level 2] (IdC2). The parameter can be accessed if [Type of stop] (Stt) = [DC injection] (dCI) or if [DC injection assign.] (dCI) is not [No] (nO).	(1) (3)	0.1 to 30 s	0.5 s
IdC2 ( )	**[DC inject. level 2]** Injection current activated by logic input or selected as stop mode, once period of time [DC injection time 1] (tdI) has elapsed. The parameter can be accessed if [Type of stop] (Stt) = [DC injection] (dCI) or if [DC injection assign.] (dCI) is not [No] (nO). **CAUTION** Check that the motor will withstand this current without overheating. **Failure to follow these instructions can result in equipment damage.**	(1) (3)	0.1 In (2) to [DC inject. level 1] (IdC)	0.5 In (2)
tdC ( )	**[DC injection time 2]** Maximum injection time [DC inject. level 2] (IdC2) for injection, selected as stop mode only. The parameter can be accessed if [Type of stop] (Stt) = [DC injection] (dCI).	(1) (3)	0.1 to 30 s	0.5 s
dOtd	**[Dis. operat opt code]** Disable operation stop mode. **[Freewheel]** (nSt): the drive stops in freewheel when going from Operation enable to Switched on state. **[Ramp stop]** (rMp): the drive stops on ramp when going from Operation enable to Switched on state.			**[Freewheel]** (nSt)

(1) The parameter can also be accessed in the [1.3 SETTINGS] (SEt-) menu.
(2) In corresponds to the rated drive current indicated in the Installation Manual and on the drive nameplate.
(3) Warning: These settings are independent of the [AUTO DC INJECTION] (AdC-) function.

( ) Parameter that can be modified during operation or when stopped.

Code	Name/Description	Adjustment range	Factory setting
AdC-	**[AUTO DC INJECTION]**		
AdC nO YES Ct	**[Auto DC injection]** Automatic current injection on stopping (at the end of the ramp) ☐ **[No]** (nO): No injection ☐ **[Yes]** (YES): Adjustable injection time ☐ **[Continuous]** (Ct): Continuous standstill injection **Warning**: There is an interlock between this function and [Motor fluxing] (FLU) page 148. If [Motor fluxing] (FLU) = [Continuous] (FCt), [Auto DC injection] (Adc) must be [No] (nO). ☞ **Note:** This parameter gives rise to the injection of current even if a run command has not been sent. It can be accessed with the drive running.		[Yes] (YES)
SdC1	**[Auto DC inj. level 1]** (1) Level of standstill DC injection current. The parameter can be accessed if [Auto DC injection] (AdC) is not [No] (nO). This parameter is forced to 0 if [Motor control type] (Ctt) page 69 = [Sync. mot.] (SYn). **CAUTION** Check that the motor will withstand this current without overheating. **Failure to follow these instructions can result in equipment damage.**	0 to 1.1 or 1.2 In (2) according to rating	0.7 In (2)
tdC1	**[Auto DC inj. time 1]** (1) Standstill injection time. The parameter can be accessed if [Auto DC injection] (AdC) is not [No] (nO). If [Motor control type] (Ctt) page 69 = [Sync. mot.] (SYn) this time corresponds to the zero speed maintenance time.	0.1 to 30 s	0.5 s
SdC2	**[Auto DC inj. level 2]** (1) 2nd level of standstill DC injection current. The parameter can be accessed if [Auto DC injection] (AdC) is not [No] (nO). This parameter is forced to 0 if [Motor control type] (Ctt) page 69 = [Sync. mot.] (SYn). **CAUTION** Check that the motor will withstand this current without overheating. **Failure to follow these instructions can result in equipment damage.**	0 to 1.1 or 1.2 In (2) according to rating	0.5 In (2)

(1) The parameter can also be accessed in the [1.3 SETTINGS] (SEt-) menu.
(2) In corresponds to the rated drive current indicated in the Installation Manual and on the drive nameplate.

Parameter that can be modified during operation or when stopped.

Code	Name/Description	Adjustment range	Factory setting
	[AUTO DC INJECTION] (continued)		
tdC2	**[Auto DC inj. time 2]** (1) 2nd standstill injection time. The parameter can be accessed if [Auto DC injection] (AdC) = [Yes] (YES.)	0 to 30 s	0 s

AdC	SdC2	Operation
YES	x	
Ct	≠ 0	
Ct	= 0	
Run command		
Speed		

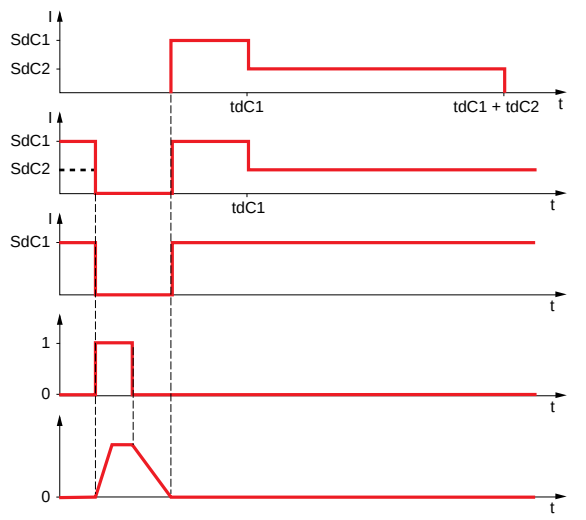

(1) The parameter can also be accessed in the [1.3 SETTINGS] (SEt-) menu.

Parameter that can be modified during operation or when stopped.

Code	Name/Description	Adjustment range	Factory setting
JOG-	**[JOG]** **Note:** This function cannot be used with certain other functions. Follow the instructions on page 124.		
JOG	**[JOG]** Pulse operation. **The JOG function is only active if the command channel and the reference channels are on the terminals.** Selecting the assigned logic input or bit activates the function. ☐ **[No]** (nO): Not assigned ☐ **[LI1]** (LI1) to **[LI6]** (LI6) ☐ **[LI7]** (LI7) to **[LI10]** (LI10): If VW3A3201 logic I/O card has been inserted ☐ **[LI11]** (LI11) to **[LI14]** (LI14): If VW3A3202 extended I/O card has been inserted ☐ **[C101]** (C101) to **[C115]** (C115): With integrated Modbus in [I/O profile] (IO) configuration ☐ **[C201]** (C201) to **[C215]** (C215): With integrated CANopen in [I/O profile] (IO) configuration ☐ **[C301]** (C301) to **[C315]** (C315): With a communication card in [I/O profile] (IO) configuration ☐ **[C401]** (C401) to **[C415]** (C415): With a Controller Inside card in [I/O profile] (IO) configuration ☐ **[CD00]** (Cd00) to **[CD13]** (Cd13): In [I/O profile] (IO) configuration can be switched with possible logic inputs ☐ **[CD14]** (Cd14) to **[CD15]** (Cd15): In [I/O profile] (IO) configuration can be switched without logic inputs The function is active when the assigned input or bit is at 1. Example: 2-wire control operation (tCC = 2C)	[No] (nO)	
JGF (1)	**[Jog frequency]** The parameter can be accessed if [JOG] (JOG) is not [No] (nO) or if a function key has been assigned to JOG (see page 122). Reference in jog operation	0 to 10 Hz	10 Hz
JGt (1)	**[Jog delay]** The parameter can be accessed if [JOG] (JOG) is not [No] (nO) or if a function key has been assigned to JOG (see page 122). Anti-repeat delay between 2 consecutive jog operations.	0 to 2.0 s	0.5 s

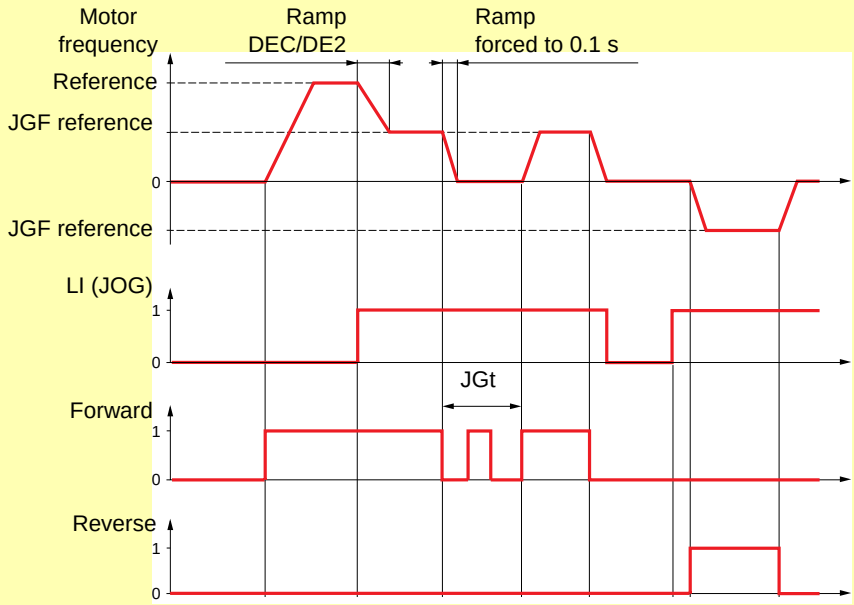

(1) The parameter can also be accessed in the [1.3 SETTINGS] (SEt-) menu.

(1) Parameter that can be modified during operation or when stopped.

Preset speeds

2, 4 or 8 speeds can be preset, requiring 1, 2 or 3 logic inputs respectively.

Note: **You must configure 2 and 4 speeds in order to obtain 4 speeds.**
You must configure 2, 4 and 8 speeds in order to obtain 8 speeds.

Combination table for preset speed inputs

8 speeds LI (PS8)	4 speeds LI (PS4)	2 speeds LI (PS2)	Speed reference
0	0	0	Reference (1)
0	0	1	SP2
0	1	0	SP3
0	1	1	SP4
1	0	0	SP5
1	0	1	SP6
1	1	0	SP7
1	1	1	SP8

(1) See the diagram on page 112: Reference 1 = (SP1).

Code	Name/Description	Adjustment range	Factory setting
PSS-	**[PRESET SPEEDS]** **Note:** This function cannot be used with certain other functions. Follow the instructions on page 124.		
PS2 nO LI1 - - -	**[2 preset speeds]** **[No]** (nO): Function inactive **[LI1]** (LI1) : : **[...]** (...): See the assignment conditions on page 118.		[No] (nO)
PS4 nO LI1 - - -	**[4 preset speeds]** **[No]** (nO): Function inactive **[LI1]** (LI1) : : **[...]** (...): See the assignment conditions on page 118. To obtain 4 speeds you must also configure 2 speeds.		[No] (nO)
PS8 nO LI1 - - -	**[8 preset speeds]** **[No]** (nO): Function inactive **[LI1]** (LI1) : : **[...]** (...): See the assignment conditions on page 118. To obtain 8 speeds you must also configure 2 and 4 speeds.		[No] (nO)

Code	Name/Description		Adjustment range	Factory setting
	[PRESET SPEEDS] (continued) The appearance of these [Preset speed x] (SPx) parameters is determined by the number of speeds configured.			
SP2	❑ **[Preset speed 2]**	(1)	0 to 500 or 599 Hz according to rating	10 Hz
SP3	❑ **[Preset speed 3]**	(1)		15 Hz
SP4	❑ **[Preset speed 4]**	(1)		20 Hz
SP5	❑ **[Preset speed 5]**	(1)		25 Hz
SP6	❑ **[Preset speed 6]**	(1)		30 Hz
SP7	❑ **[Preset speed 7]**	(1)		35 Hz
SP8	❑ **[Preset speed 8]** The factory setting changes to 60 Hz if [Standard mot. freq] (bFr) = [60Hz NEMA] (60).	(1)		50 Hz

(1) The parameter can also be accessed in the [1.3 SETTINGS] (SEt-) menu.

Parameter that can be modified during operation or when stopped.

+/- speed

Two types of operation are available.

1. **Use of single-press buttons:** Two logic inputs are required in addition to the operating direction(s).
   The input assigned to the “+ speed” command increases the speed, the input assigned to the “- speed” command decreases the speed.

2. **Use of double-press buttons:** Only one logic input assigned to “+ speed” is required.

+/- speed with double-press buttons:

Description: 1 button pressed twice (2 steps) for each direction of rotation. A contact closes each time the button is pressed.

	Released (- speed)	1st press (speed maintained)	2nd press (faster)
Forward button	–	a	a and b
Reverse button	–	c	c and d

Example of wiring:

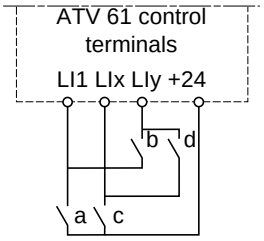

LI1: forward
LIx: reverse
LIy: + speed

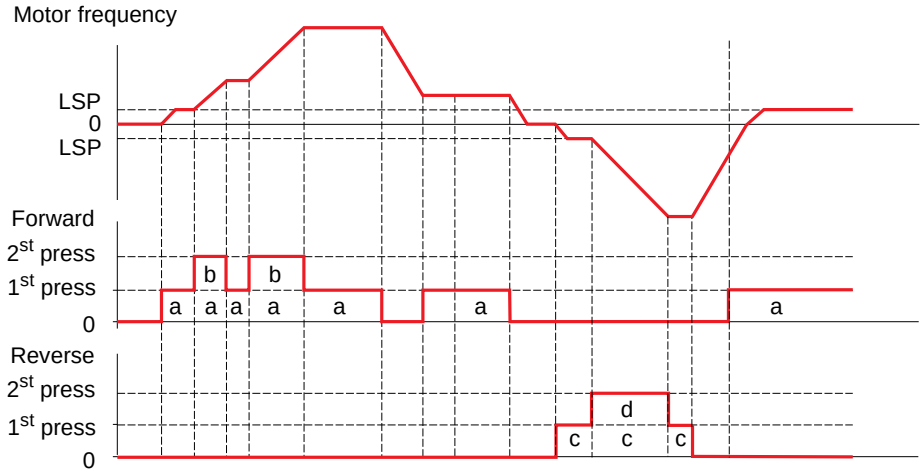

Do not use this +/-speed type with 3-wire control.

Whichever type of operation is selected, the max. speed is set by [High speed] (HSP) (see page 38).

Note:
If the reference is switched via rFC (see page 120) from any one reference channel to another reference channel with “+/- speed”, the value of reference rFr (after ramp) may be copied at the same time in accordance with the [Copy channel 1 --> 2] (COP) parameter, see page 121.
If the reference is switched via rFC (see page 120) from one reference channel to any other reference channel with “+/- speed”, the value of reference rFr (after ramp) is always copied at the same time.

This prevents the speed being incorrectly reset to zero when switching takes place.

Code	Name/Description	Adjustment range	Factory setting
UPd-	**[+/-Speed]** Function can be accessed if reference channel [Ref.2 channel] (Fr2) = [+/-Speed] (UPdt) see page 120. **Note:** This function cannot be used with certain other functions. Follow the instructions on page 124.		
USP	**[+ speed assignment]** ☐ **[No]** (nO): Function inactive ☐ **[LI1]** (LI1) to **[LI6]** (LI6) ☐ **[LI7]** (LI7) to **[LI10]** (LI10): If VW3A3201 logic I/O card has been inserted ☐ **[LI11]** (LI11) to **[LI14]** (LI14): If VW3A3202 extended I/O card has been inserted ☐ **[C101]** (C101) to **[C115]** (C115): With integrated Modbus in [I/O profile] (IO) ☐ **[C201]** (C201) to **[C215]** (C215): With integrated CANopen in [I/O profile] (IO) ☐ **[C301]** (C301) to **[C315]** (C315): With a communication card in [I/O profile] (IO) ☐ **[C401]** (C401) to **[C415]** (C415): With a Controller Inside card in [I/O profile] (IO) ☐ **[CD00]** (Cd00) to **[CD13]** (Cd13): In [I/O profile] (IO) can be switched with possible logic inputs ☐ **[CD14]** (Cd14) to **[CD15]** (Cd15): In [I/O profile] (IO) can be switched without logic inputs Function active if the assigned input or bit is at 1.	[No] (nO)	
dSP	**[-Speed assignment]** ☐ **[No]** (nO): Function inactive ☐ **[LI1]** (LI1) to **[LI6]** (LI6) ☐ **[LI7]** (LI7) to **[LI10]** (LI10): If VW3A3201 logic I/O card has been inserted ☐ **[LI11]** (LI11) to **[LI14]** (LI14): If VW3A3202 extended I/O card has been inserted ☐ **[C101]** (C101) to **[C115]** (C115): With integrated Modbus in [I/O profile] (IO) ☐ **[C201]** (C201) to **[C215]** (C215): With integrated CANopen in [I/O profile] (IO) ☐ **[C301]** (C301) to **[C315]** (C315): With a communication card in [I/O profile] (IO) ☐ **[C401]** (C401) to **[C415]** (C415): With a Controller Inside card in [I/O profile] (IO) ☐ **[CD00]** (Cd00) to **[CD13]** (Cd13): In [I/O profile] (IO) can be switched with possible logic inputs ☐ **[CD14]** (Cd14) to **[CD15]** (Cd15): In [I/O profile] (IO) can be switched without logic inputs Function active if the assigned input or bit is at 1.	[No] (nO)	
Str	**[Reference saved]** Associated with the "+/- speed" function, this parameter can be used to save the reference: • When the run commands disappear (saved to RAM) • When the line supply or the run commands disappear (saved to EEPROM) Therefore, the next time the drive starts up, the speed reference is the last reference saved. ☐ **[No]** (nO): No save (the next time the drive starts up, the speed reference is [Low speed] (LSP), see page 38) ☐ **[RAM]** (rAM): Save to RAM ☐ **[EEprom]** (EEP): Save to EEPROM	[No] (nO)	

+/- speed around a reference

The reference is given by Fr1 or Fr1b with summing/subtraction/multiplication functions and preset speeds if relevant (see the diagram on page 112). For improved clarity, we will call this reference A. The action of the +speed and -speed buttons can be set as a % of this reference A. On stopping, the reference (A +/- speed) is not saved, so the drive restarts with reference A only.
The maximum total reference is always limited by [High speed] (HSP) and the minimum reference by [Low speed] (LSP), see page 38.

Example of 2-wire control:

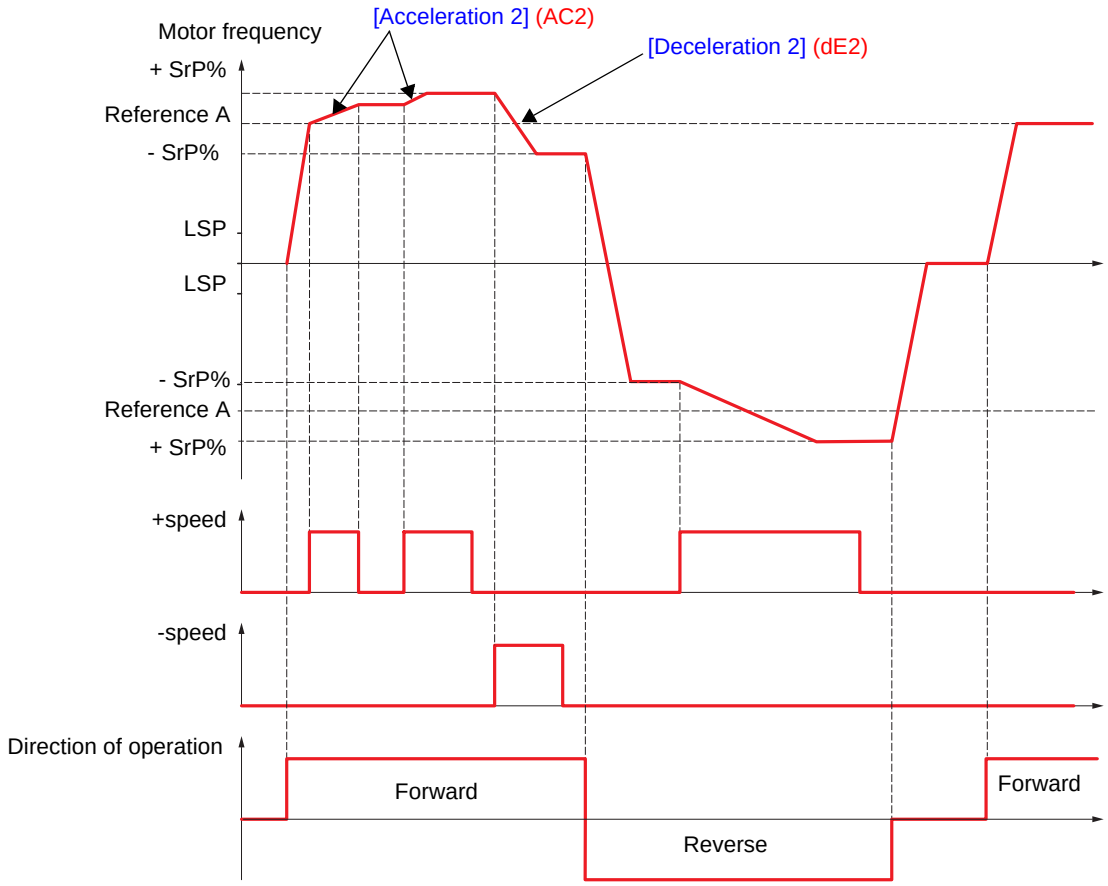

Code	Name/Description	Adjustment range	Factory setting
SrE-	**[+/-SPEED AROUND REF.]** The function can be accessed for reference channel [Ref.1 channel] (Fr1). **Note:** This function cannot be used with certain other functions. Follow the instructions on page 124.		
US1 nO LI1 - - -	**[+ speed assignment]** ☐ **[No]** (nO): Function inactive ☐ **[LI1]** (LI1) : : ☐ **[...]** (...): See the assignment conditions on page 118. Function active if the assigned input or bit is at 1.		[No] (nO)
dS1 nO LI1 - - -	**[-Speed assignment]** ☐ **[No]** (nO): Function inactive ☐ **[LI1]** (LI1) : : ☐ **[...]** (...): See the assignment conditions on page 118. Function active if the assigned input or bit is at 1.		[No] (nO)
SrP ( )	**[+/-Speed limitation]** This parameter limits the variation range with +/- speed as a % of the reference. The ramps used in this function are [Acceleration 2] (AC2) and [Deceleration 2] (dE2). The parameter can be accessed if +/- speed is assigned.	0 to 50%	10%
AC2 ( )	**[Acceleration 2]** (1) Time to accelerate from 0 to the [Rated motor freq.] (FrS). Make sure that this value is compatible with the inertia being driven. The parameter can be accessed if +/- speed is assigned.	0.01 to 9,000 s (2)	5.0 s
dE2 ( )	**[Deceleration 2]** (1) Time to decelerate from the [Rated motor freq.] (FrS) to 0. Make sure that this value is compatible with the inertia being driven. The parameter can be accessed if +/- speed is assigned.	0.01 to 9,000 s (2)	5.0 s

(1) The parameter can also be accessed in the [1.3 SETTINGS] (SEt-) menu.
(2) Range 0.01 to 99.99 s or 0.1 to 999.9 s or 1 to 9,000 s according to [Ramp increment] (Inr) page 131.

( ) Parameter that can be modified during operation or when stopped.

Reference saving:

Saving a speed reference value using a logic input command lasting longer than 0.1 s.

- This function is used to control the speed of several drives alternately via a single analog reference and one logic input for each drive.
- It is also used to confirm a line reference (communication bus or network) on several drives via a logic input. This allows movements to be synchronized by getting rid of variations when the reference is sent.
- The reference is acquired 100 ms after the rising edge of the request. A new reference is not then acquired until a new request is made.

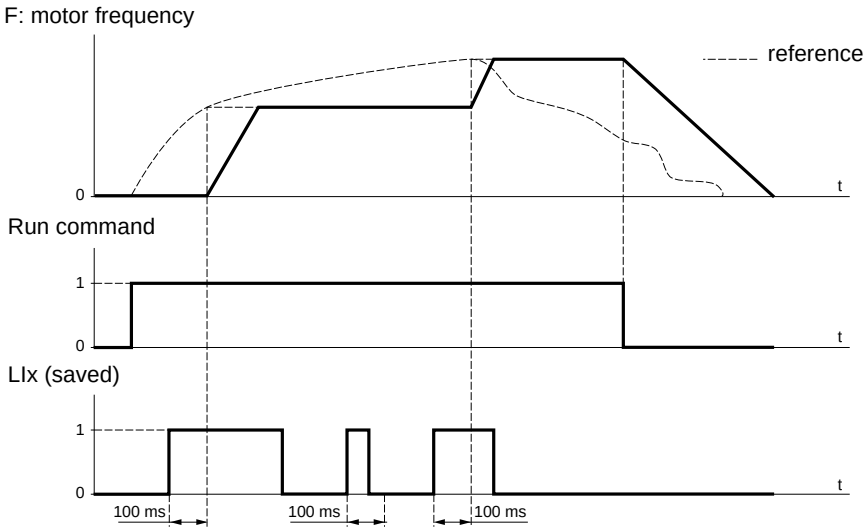

Code	Name/Description	Adjustment range	Factory setting
SPN-	**[MEMO REFERENCE]**		
SPN	**[Ref. memo ass.]** ☐ **[No]** (nO): Function inactive ☐ **[LI1]** (LI1) to **[LI6]** (LI6) ☐ **[LI7]** (LI7) to **[LI10]** (LI10): If VW3A3201 logic I/O card has been inserted ☐ **[LI11]** (LI11) to **[LI14]** (LI14): If VW3A3202 extended I/O card has been inserted Assignment to a logic input. Function active if the assigned input is at 1.	nO LI1 - LI14	[No] (nO)

Code	Name/Description	Adjustment range	Factory setting
FLI-	**[FLUXING BY LI]**		
FLU	**[Motor fluxing]**	(1)	[No] (FnO)

- FnC **[Not cont.]** (FnC): Non-continuous mode
- FCt **[Continuous]** (FCt): Continuous mode. This option is not possible if [Auto DC injection] (AdC) page 137 is [Yes] (YES) or if [Type of stop] (Stt) page 135 is [Freewheel] (nSt).
- FnO **[No]** (FnO): Function inactive

At and above ATV61HD55M3X, ATV61HD90N4 and ATV61HC11Y, if [Motor control type] (Ctt) page 69 = [SVC V] (UUC) or [Energy Sav.] (nLd), this selection cannot be made and the factory setting is replaced by [Not cont.] (FnC).

If [Motor control type] (Ctt) = [Sync. mot.] (SYn) the factory setting is replaced by [Not cont.] (FnC).

In order to obtain rapid high torque on startup, magnetic flux needs to already have been established in the motor.
- In [Continuous] (FCt) mode, the drive automatically builds up flux when it is powered up.
- In [Not cont.] (FnC) mode, fluxing occurs when the motor starts up.

The flux current is greater than nCr (configured rated motor current) when the flux is established and is then adjusted to the motor magnetizing current...

CAUTION

Check that the motor will withstand this current without overheating.
Failure to follow these instructions can result in equipment damage.

If [Motor control type] (Ctt) page 69 = [Sync. mot.] (SYn), the [Motor fluxing] (FLU) parameter causes the alignment of the motor and not the fluxing.

FLI	**[Fluxing assignment]**		[No] (nO)

- nO **[No]** (nO): Function inactive
- LI1 **[LI1]** (LI1)
  :
  :
- - **[...]** (...): See the assignment conditions on page 118.

Assignment is only possible if [Motor fluxing] (FLU) is not [Continuous] (FCt).
- In [Not cont.] (FnC) mode:
  - If an LI or a bit is assigned to the motor fluxing command, flux is built up when the assigned input or bit is at 1.
  - If an LI or a bit has not been assigned, or if the LI or bit assigned is at 0 when a run command is sent, fluxing occurs when the motor starts.
- In [No] (FnO) mode:
  - If an LI or a bit is assigned to the motor fluxing command, flux is built up when the assigned input or bit is at 1 and is suppressed when the assigned input or bit is at 0.

(1) The parameter can also be accessed in the [1.3 SETTINGS] (SEt-) menu.

Parameter that can be modified during operation or when stopped.

PID regulator

Block diagram

The function is activated by assigning an analog input to the PID feedback (measurement).

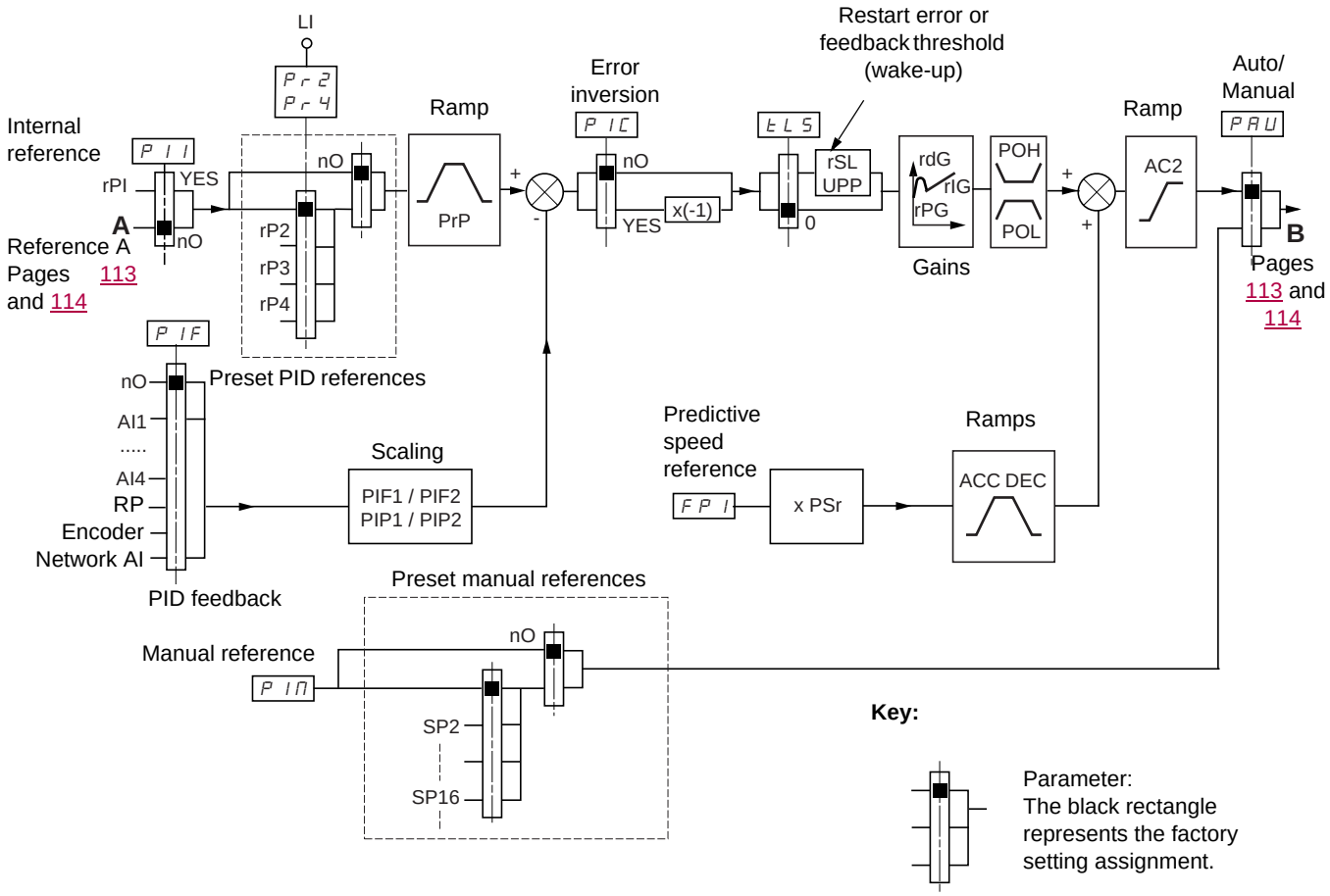

PID feedback:
The PID feedback must be assigned to one of the analog inputs AI1 to AI4, to the frequency input or the encoder, according to whether any extension cards have been inserted.

PID reference:
The PID reference must be assigned to the following parameters:
- Preset references via logic inputs (rP2, rP3, rP4)
- In accordance with the configuration of [Act. internal PID ref.] (PII) pages 153:
  - Internal reference (rPI) or
  - Reference A (Fr1 or Fr1b, see page 113)

Combination table for preset PID references

LI (Pr4)	LI (Pr2)	Pr2 = nO	reference
			rPI or A
0	0		rPI or A
0	1		rP2
1	0		rP3
1	1		rP4

A predictive speed reference can be used to initialize the speed on restarting the process.

How the various ramps work:
- ACC and dEC are only active in the event of changes in the predictive reference and not on starting PID regulation.
- AC2 affects the PID output on starting PID regulation and on PID "wake-ups" only.
- PrP is only active in the event of changes in the PID reference.

Scaling of feedback and references:

- PIF1, PIF2 parameters
  Can be used to scale the PID feedback (sensor range).
  This scale MUST be maintained for all other parameters.

- PIP1, PIP2 parameters
  Can be used to scale the adjustment range, i.e., the reference. **The adjustment range MUST be within the sensor range.**

  The scaling parameters must not exceed a value of 32767. To simplify setup, we recommend that you use values as close as possible to this maximum limit but remain within powers of 10 in respect of the actual values.

  Example (see the graph below): Adjustment of the volume in a tank, between 6 m^3 and 15 m^3.
  - Sensor used 4-20 mA, 4.5 m^3 for 4 mA, 20 m^3 for 20 mA, with the result that PIF1 = 4500 and PIF2 = 20000.
  - Adjustment range 6 to 15 m^3, with the result that PIP1 = 6000 (min. reference) and PIP2 = 15000 (max. reference).
  - Example references:
    - rP1 (internal reference) = 9,500
    - rp2 (preset reference) = 6,500
    - rP3 (preset reference) = 8,000
    - rP4 (preset reference) = 11,200

The [DISPLAY CONFIG.] menu can be used to customize the name of the unit displayed and its format.

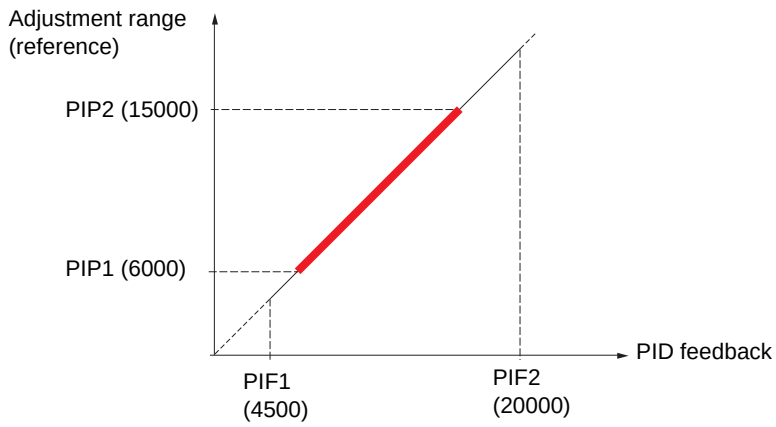

Other parameters:

- rSL parameter:
  Can be used to set the PID error threshold, above which the PID regulator will be reactivated (wake-up) after a stop due to the max. time threshold being exceeded at low speed (tLS).

- Reversal of the direction of correction (PIC): If PIC = nO, the speed of the motor will increase when the error is positive, for example: pressure control with a compressor. If PIC = YES, the speed of the motor will decrease when the error is positive, for example: temperature control using a cooling fan.

- UPP parameter:
  If PIC = nO, can be used to set the PID feedback threshold, above which the PID regulator will be reactivated (wake-up) after a stop due to the max. time threshold being exceeded at low speed (tLS).
  If PIC = YES, can be used to set the PID feedback threshold, below which the PID regulator will be reactivated (wake-up) after a stop due to the max. time threshold being exceeded at low speed (tLS).

- The integral gain may be short-circuited by a logic input.

- An alarm on the PID feedback may be configured and indicated by a logic output.

- An alarm on the PID error may be configured and indicated by a logic output.

“Manual – Automatic” operation with PID

This function combines the PID regulator, the preset speeds and a manual reference. Depending on the state of the logic input, the speed reference is given by the preset speeds or by a manual reference input via the PID function.

Manual reference (PIM)

- Analog inputs AI1 to AI4
- Frequency input
- Encoder

Predictive speed reference (FPI)

- [AI1] (AI1): Analog input
- [AI2] (AI2): Analog input
- [AI3] (AI3): Analog input, if VW3A3202 extension card has been inserted
- [AI4] (AI4): Analog input, if VW3A3202 extension card has been inserted
- [RP] (PI): Frequency input, if VW3A3202 extension card has been inserted
- [Encoder] (PG): Encoder input, if encoder card has been inserted
- [HMI] (LCC): Graphic display terminal
- [Modbus] (Mdb): Integrated Modbus
- [CANopen] (CAn): Integrated CANopen
- [Com. card] (nEt): Communication card (if inserted)
- [Prog. card] (APP): Controller Inside card (if inserted)

Setting up the PID regulator

1. **Configuration in PID mode**
   See the diagram on page 149.

2. **Perform a test in factory settings mode (in most cases, this will be sufficient).**
   To optimize the drive, adjust rPG or rIG gradually and independently and observe the effect on the PID feedback in relation to the reference.

3. **If the factory settings are unstable or the reference is incorrect**

   - Perform a test with a speed reference in Manual mode (without PID regulator) and with the drive on load for the speed range of the system:
     - In steady state, the speed must be stable and comply with the reference and the PID feedback signal must be stable.
     - In transient state, the speed must follow the ramp and stabilize quickly, and the PID feedback must follow the speed.
     If this is not the case, see the settings for the drive and/or sensor signal and wiring.

   - Switch to PID mode.
   - Set brA to no (no auto-adaptation of the ramp).
   - Set the PID ramp (PrP) to the minimum permitted by the mechanism without triggering an ObF fault.
   - Set the integral gain (rIG) to minimum.
   - Leave the derivative gain (rdG) at 0.
   - Observe the PID feedback and the reference.
   - Switch the drive ON/OFF a number of times or vary the load or reference rapidly a number of times.
   - Set the proportional gain (rPG) in order to ascertain the best compromise between response time and stability in transient phases (slight overshoot and 1 to 2 oscillations before stabilizing).
   - If the reference varies from the preset value in steady state, gradually increase the integral gain (rIG), reduce the proportional gain (rPG) in the event of instability (pump applications), find a compromise between response time and static precision (see diagram).
   - Lastly, the derivative gain may permit the overshoot to be reduced and the response time to be improved, although this will make it more difficult to obtain a compromise in terms of stability, as it depends on 3 gains.
   - Perform in-production tests over the whole reference range.

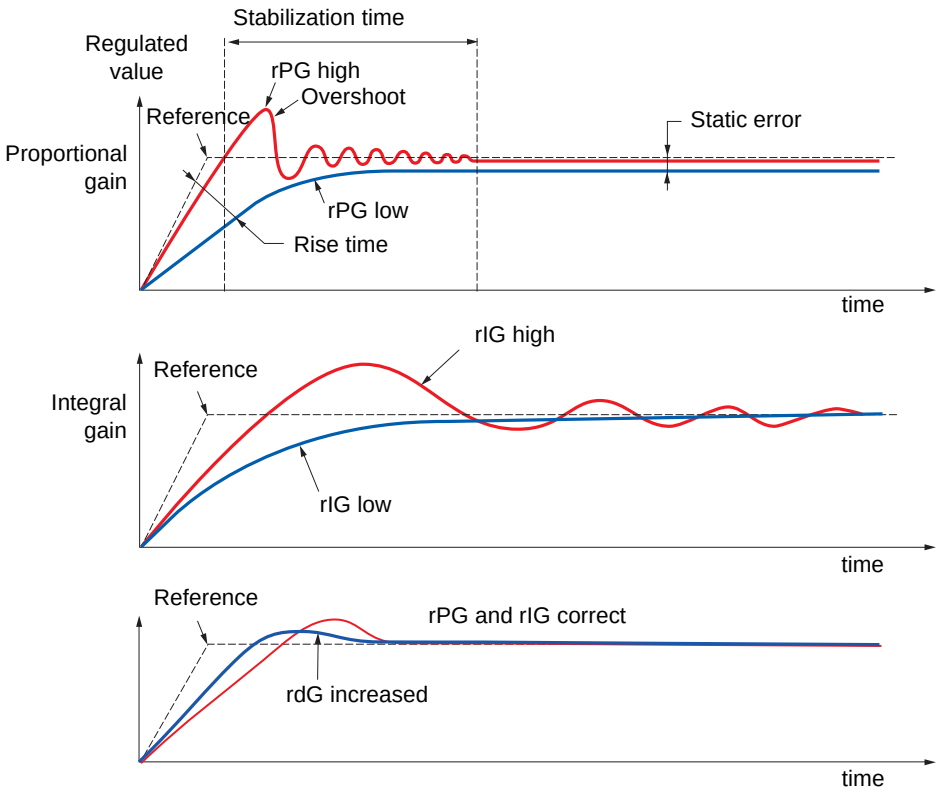

The oscillation frequency depends on the system kinematics.

Parameter	Rise time	Overshoot	Stabilization time	Static error
rPG ↗	↘↘	↗	=	↘
rIG ↗	↘	↗↗	↗	↘↘
rdG ↗	=	↘	↘	=

Code	Name/Description	Adjustment range	Factory setting
PId-	**[PID REGULATOR]** **Note:** This function cannot be used with certain other functions. Follow the instructions on page 124.		
PIF nO AI1 AI2 AI3 AI4 PI PG AIU1	**[PID feedback ass.]** ☐ **[No]** (nO): Not assigned (function inactive) In this case, none of the function parameters can be accessed. ☐ **[AI1]** (AI1): Analog input ☐ **[AI2]** (AI2): Analog input ☐ **[AI3]** (AI3): Analog input, if VW3A3202 extension card has been inserted ☐ **[AI4]** (AI4): Analog input, if VW3A3202 extension card has been inserted ☐ **[RP]** (PI): Frequency input, if VW3A3202 extension card has been inserted ☐ **[Encoder]** (PG): Encoder input, if encoder card has been inserted ☐ **[Network AI]** (AIU1): Virtual input via communication bus. **Note :** If the equipment switches to forced local mode (see page 218), the virtual input remains frozen at the last value transmitted.		[No] (nO)
AIC1 nO Mdb CAn nEt APP	**[AI net. channel]** The parameter can be accessed if [PID feedback ass.] (PIF) = [Network AI] (AIU1). This parameter can also be accessed in the [1.5 INPUTS / OUTPUTS CFG] (I-O-) menu. ☐ **[No]** (nO): Not assigned ☐ **[Modbus]** (Mdb): Integrated Modbus ☐ **[CANopen]** (CAn): Integrated CANopen ☐ **[Com. card]** (nEt): Communication card (if inserted) ☐ **[Prog. card]** (APP): Controller Inside card (if inserted)		[No] (nO)
PIF1 ( )	**[Min PID feedback]** (1) Value for minimum feedback. Adjustment range from 0 to [Max PID feedback] (PIF2) - 1 (2).		100
PIF2 ( )	**[Max PID feedback]** (1) Value for maximum feedback Adjustment range from [Min PID feedback] (PIF1) + 1 to 32,767 (2).		1,000
PIP1 ( )	**[Min PID reference]** (1) Minimum process value. Adjustment range between [Min PID feedback] (PIF1) and [Max PID feedback] (PIP2) - 1 (2).		150
PIP2 ( )	**[Max PID reference]** (1) Maximum process value Adjustment range between [Min PID reference] (PIP1) + 1 to [Max PID reference] (PIF2) (2).		900
PII nO YES	**[Act. internal PID ref.]** Internal PID regulator reference ☐ **[No]** (nO): The PID regulator reference is given by Fr1 or Fr1b with summing/subtraction/multiplication functions (see the diagram on page 112). ☐ **[Yes]** (YES): The PID regulator reference is internal via parameter rPI.		[No] (nO)
rPI ( )	**[Internal PID ref.]** Internal PID regulator reference This parameter can also be accessed in the [1.2 MONITORING] (SUP-) menu. Adjustment range between [Min PID reference] (PIP1) and [Max PID reference] (PIP2) (2).		150
rPG ( )	**[PID prop. gain]** Proportional gain	0.01 to 100	1

(1) The parameter can also be accessed in the [1.3 SETTINGS] (SEt-) menu.
(2) If a graphic display terminal is not in use, values greater than 9,999 will be displayed on the 4-digit display with a period mark after the thousand digit, e.g., 15.65 for 15,650.

( ) Parameter that can be modified during operation or when stopped.

Code	Name/Description	Adjustment range	Factory setting
	[PID REGULATOR] (continued)		
rIG	**[PID integral gain]** Integral gain	0.01 to 100	1
rdG	**[PID derivative gain]** Derivative gain	0.00 to 100	0
PrP	**[PID ramp]** (1) PID acceleration/deceleration ramp, defined to go from [Min PID reference] (PIP1) to [Max PID reference] (PIP2) and vice versa.	0 to 99.9 s	0 s
PIC nO YES	**[PID correct. reverse]** ☐ **[No]** (nO) ☐ **[Yes]** (YES) Reversal of the direction of correction (PIC): If PIC = nO, the speed of the motor will increase when the error is positive. Example: pressure control with a compressor. If PIC = YES, the speed of the motor will decrease when the error is positive. Example: temperature control using a cooling fan.		[No] (nO)
POL	**[Min PID output]** (1) Minimum value of regulator output in Hz	- 500 to 500 or - 599 Hz to 599 Hz according to rating	0 Hz
POH	**[Max PID output]** (1) Maximum value of regulator output in Hz	0 to 500 or 599 Hz according to rating	60 Hz
PAL	**[Min fbk alarm]** (1) Minimum regulator feedback monitoring threshold (alarm can be assigned to a relay or a logic output, page 96). Adjustment range from [Min PID feedback] (PIF1) to [Max PID feedback] (PIF2) (2).		100
PAH	**[Max fbk alarm]** (1) Maximum regulator feedback monitoring threshold (alarm can be assigned to a relay or a logic output, page 96). Adjustment range from [Min PID feedback] (PIF1) to [Max PID feedback] (PIF2) (2).		1,000
PEr	**[PID error Alarm]** (1) Regulator error monitoring threshold.	0 to 65,535 (2)	100
PIS nO LI1 - - -	**[PID integral reset]** ☐ **[No]** (nO): Function inactive ☐ **[LI1]** (LI1) : : ☐ **[...]** (...): See the assignment conditions on page 118. If the assigned input or bit is at 0, the function is inactive (the PID integral is enabled). If the assigned input or bit is at 1, the function is active (the PID integral is disabled).		[No] (nO)

(1) The parameter can also be accessed in the [1.3 SETTINGS] (SEt-) menu.
(2) If a graphic display terminal is not in use, values greater than 9,999 will be displayed on the 4-digit display with a period mark after the thousand digit, e.g., 15.65 for 15,650.

Parameter that can be modified during operation or when stopped.

Code	Name/Description	Adjustment range	Factory setting
	[PID REGULATOR] (continued)		
FPI	**[Speed ref. assign.]** PID regulator predictive speed input nO **[No]** (nO): Not assigned (function inactive) AI1 **[AI1]** (AI1): Analog input AI2 **[AI2]** (AI2): Analog input AI3 **[AI3]** (AI3): Analog input, if VW3A3202 extension card has been inserted AI4 **[AI4]** (AI4): Analog input, if VW3A3202 extension card has been inserted LCC **[HMI]** (LCC): Graphic display terminal Mdb **[Modbus]** (Mdb): Integrated Modbus CAn **[CANopen]** (CAn): Integrated CANopen nEt **[Com. card]** (nEt): Communication card (if inserted) APP **[Prog. card]** (APP): Controller Inside card (if inserted) PI **[RP]** (PI): Frequency input, if VW3A3202 extension card has been inserted PG **[Encoder]** (PG): Encoder input, if encoder card has been inserted		[No] (nO)
PSr	**[Speed input%]** (1) Multiplying coefficient for predictive speed input. The parameter cannot be accessed if [Speed ref. assign.] (FPI) = [No] (nO).	1 to 100%	100%
PAU	**[Auto/Manual assign.]** nO **[No]** (nO): The PID is always active. LI1 **[LI1]** (LI1) - - - **[...]** (...): See the assignment conditions on page 118. If the assigned input or bit is at 0, the PID is active. If the assigned input or bit is at 1, manual operation is active.		[No] (nO)
AC2	**[Acceleration 2]** (1) Time to accelerate from 0 to the [Rated motor freq.] (FrS). Make sure that this value is compatible with the inertia being driven. Ramp AC2 is only active when the PID function is starting up and in the event of PID "wake-ups".	0.01 to 9000 s (2)	5.0 s
PIM	**[Manual reference]** Manual speed input. The parameter can be accessed if [Auto/Manual assign.] (PAU) is not [No] (nO). nO **[No]** (nO): Not assigned (function inactive) AI1 **[AI1]** (AI1): Analog input AI2 **[AI2]** (AI2): Analog input AI3 **[AI3]** (AI3): Analog input, if VW3A3202 extension card has been inserted AI4 **[AI4]** (AI4): Analog input, if VW3A3202 extension card has been inserted PI **[RP]** (PI): Frequency input, if VW3A3202 extension card has been inserted PG **[Encoder]** (PG): Encoder input, if encoder card has been inserted The preset speeds are active on the manual reference if they have been configured.		[No] (nO)

(1) The parameter can also be accessed in the [1.3 SETTINGS] (SEt-) menu.
(2) Range 0.01 to 99.99 s or 0.1 to 999.9 s or 1 to 9000 s according to [Ramp increment] (Inr) page 131.

Parameter that can be modified during operation or when stopped.

PID feedback supervision

Used to define the operating mode in the event of detection of a PI feedback:
- Lower than the limit set if [PID correct. reverse] (PIC) = [No] (nO)
- Higher than the limit set if [PID correct. reverse] (PIC) = [Yes] (YES)

Where [PID correct. reverse] (PIC) = [No] (nO)

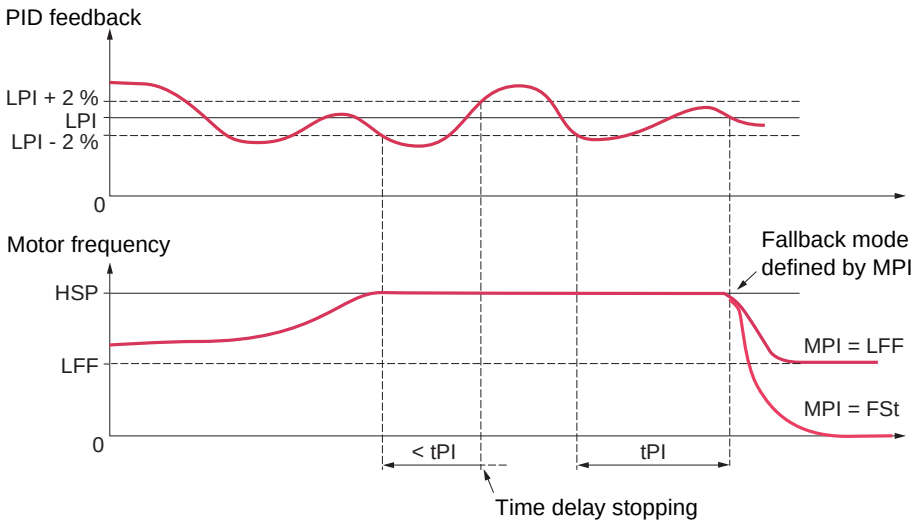

If, once maximum speed has been reached ([High speed] (HSP)), the PID feedback is lower than the supervision threshold [PID Threshold] (LPI) -2%, a time delay tPI is launched. If at the end of this time delay the value of the PID feedback is still lower than the supervision threshold [PID Threshold] (LPI) + 2%, the drive switches to fallback mode as defined by parameter MPI.

In all cases the drive reverts to PID regulation mode as soon as the PID feedback exceeds the supervision threshold [PID Threshold] (LPI) +2%.

Where [PID correct. reverse] (PIC) = [Yes] (YES)

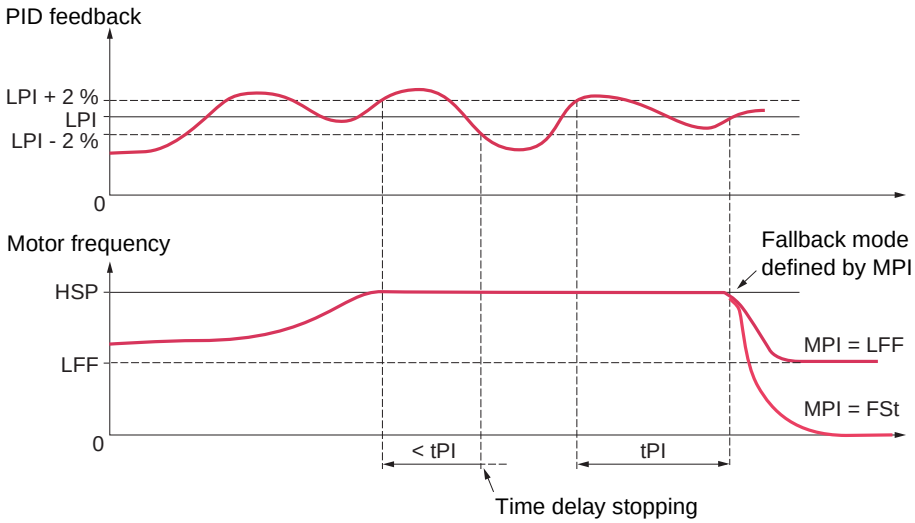

If, once maximum speed has been reached ([High speed] (HSP)), the PID feedback is higher than the supervision threshold [PID Threshold] (LPI) +2%, a time delay tPI is launched. If at the end of this time delay the value of the PID feedback is still higher than the supervision threshold [PID Threshold] (LPI) -2%, the drive switches to fallback mode as defined by parameter MPI.

In all cases the drive reverts to PID regulation mode as soon as the PID feedback undershoots the supervision threshold [PID Threshold] (LPI) -2%.

Code	Name/Description	Adjustment range	Factory setting
	[PID REGULATOR] (continued)		
LPI (✓) nO -	**[PID Threshold]** (1) PID regulator feedback supervision threshold (alarm can be assigned to a relay or a logic output, page 96). Adjustment range: ☐ **[No]** (nO): Function inactive (it will not be possible to access the other function parameters) ☐ between [Min PID feedback] (PIF1) and [Max PID feedback] (PIF2) (2).		100
tPI (✓)	**[PID Ctrl. time delay]** (1) PID regulator feedback supervision time delay	0 to 600 s	0 s
MPI nO YES LFF rMP FSt	**[PID Control Mngmt]** Type of stop for PID regulator feedback supervision fault. ☐ **[Ignore]** (nO): Fault ignored ☐ **[Freewheel]** (YES): Freewheel stop. ☐ **[fallback spd]** (LFF): Switch to fallback speed, maintained as long as the fault is present and the run command is not disabled (3). ☐ **[Ramp stop]** (rMP): Stop on ramp ☐ **[Fast stop]** (FSt): Fast stop		[Ignore] (nO)
LFF	**[Fallback speed]** Fallback speed for PID regulator feedback supervision fault.	0 to 500 or 599 Hz according to rating	0 Hz

(1) The parameter can also be accessed in the [1.3 SETTINGS] (SEt-) menu.
(2) If a graphic display terminal is not in use, values greater than 9,999 will be displayed on the 4-digit display with a period mark after the thousand digit, e.g., 15.65 for 15,650.
(3) Because, in this case, the fault does not trigger a stop, it is essential to assign a relay or logic output to its indication.

(✓) Parameter that can be modified during operation or when stopped.

Code	Name/Description	Adjustment range	Factory setting
Pr1-	**[PID PRESET REFERENCES]** Function can be accessed if [PID feedback ass.] (PIF) is assigned.		
Pr2 nO LI1 - - -	**[2 preset PID ref.]** ☐ **[No]** (nO): Function inactive ☐ **[LI1]** (LI1) : : ☐ **[...]** (...): See the assignment conditions on page 118. If the assigned input or bit is at 0, the function is inactive. If the assigned input or bit is at 1, the function is active.		[No] (nO)
Pr4 nO LI1 - - -	**[4 preset PID ref.]** Make sure that [2 preset PID ref.] (Pr2) has been assigned before assigning this function. ☐ **[No]** (nO): Function inactive ☐ **[LI1]** (LI1) : : ☐ **[...]** (...): See the assignment conditions on page 118. If the assigned input or bit is at 0, the function is inactive. If the assigned input or bit is at 1, the function is active.		[No] (nO)
rP2 ( )	**[Preset ref. PID 2]** (1) The parameter can be accessed if [2 preset PID ref.] (Pr2) has been assigned. Adjustment range between [Min PID reference] (PIP1) and [Max PID reference] (PIP2) (2).		300
rP3 ( )	**[Preset ref. PID 3]** (1) The parameter can be accessed if [2 preset PID ref.] (Pr2) and [4 preset PID ref.] (Pr4) have been assigned. Adjustment range between [Min PID reference] (PIP1) and [Max PID reference] (PIP2) (2).		600
rP4 ( )	**[Preset ref. PID 4]** (1) The parameter can be accessed if [2 preset PID ref.] (Pr2) and [4 preset PID ref.] (Pr4) have been assigned. Adjustment range between [Min PID reference] (PIP1) and [Max PID reference] (PIP2) (2).		900

(1) The parameter can also be accessed in the [1.3 SETTINGS] (SEt-) menu.
(2) If a graphic display terminal is not in use, values greater than 9,999 will be displayed on the 4-digit display with a period mark after the thousand digit, e.g., 15.65 for 15,650.

( ) Parameter that can be modified during operation or when stopped.

Sleep/Wake-up

This function supplements the PID regulator, in order to avoid prolonged operation at excessively low speeds when neither useful nor desirable.

- It stops the motor after a period of operation at reduced speed. This time and speed can be adjusted.
- It restarts the motor if the PID error or feedback exceeds an adjustable threshold.

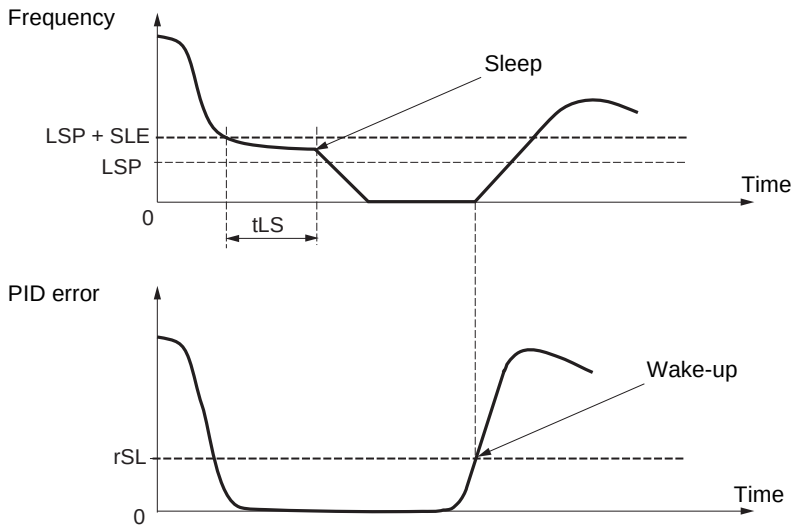

Sleep:

Following operation at a speed less than [Low speed] (LSP) + [Sleep Offset Thres.] (SLE) for a period of time greater than or equal to [Low speed time out] (tLS), the motor is stopped on a ramp.

Wake-up:

If the PID error exceeds [PID wake up thresh.] (rSL) (see the example opposite) or if the PID feedback exceeds [PID Wakeup Thres.] (UPP), the PID regulator is reactivated.

Code	Name/Description	Adjustment range	Factory setting
SrM-	**[SLEEPING / WAKE UP]**		
tLS	**[Low speed time out]** (1) Maximum operating time at [Low speed] (LSP). Following operation at LSP + SLE for a defined period, a motor stop is requested automatically. The motor restarts if the reference exceeds (LSP + SLE) and if a run command is still present. Caution: Value 0 corresponds to an unlimited period. **Note:** If [Low speed time out] (tLS) is not 0, [Type of stop] (Stt) page 135 is forced to [Ramp stop] (rMP) (only if a ramp stop can be configured).	0 to 999.9 s	0 s
LSP	**[Low speed]** (1) Motor frequency at minimum reference, can be set between 0 and [High speed] (HSP) (see page 50).		0 Hz
SLE	**[Sleep Offset Thres.]** (1) Adjustable restart threshold (offset) following a stop after prolonged operation at [Low speed] (LSP) + [Sleep Offset Thres.] (SLE), in Hz. The motor restarts if the reference rises above (LSP + SLE) and if a run command is still present.	1 to 500 or 599 Hz according to rating	1 Hz
rSL	**[PID wake up thresh.]** If the "PID" and "Low speed operating time" tLS functions are configured at the same time, the PID regulator may attempt to set a speed lower than LSP. This results in unsatisfactory operation, which consists of starting, operating at low speed then stopping, and so on… Parameter rSL (restart error threshold) can be used to set a minimum PID error threshold for restarting after a stop at prolonged LSP. The function is inactive if the PID function has not been configured or if tLS = 0 or if rSL = 0. **WARNING** **UNINTENDED EQUIPMENT OPERATION** Check that unintended restarts will not present any danger. **Failure to follow these instructions can result in death or serious injury.** Adjustment range from 0.0 to [Max PID feedback] (PIF2) (2).		0

(1) The parameter can also be accessed in the [1.3 SETTINGS] (SEt-) menu.
(2) If a graphic display terminal is not in use, values greater than 9,999 will be displayed on the 4-digit display with a period mark after the thousand digit, e.g., 15.65 for 15,650.

Parameter that can be modified during operation or when stopped.

Code	Name/Description	Adjustment range	Factory setting
UPP	❑ **[PID Wakeup Thres.]** If the “PID” and “Low speed operating time” tLS functions are configured at the same time, the PID regulator may attempt to set a speed lower than LSP. This results in unsatisfactory operation, which consists of starting, operating at low speed then stopping, and so on… Parameter UPP (restart feedback threshold) can be used to set a PID feedback threshold for restarting after a stop due to prolonged LSP. This threshold is minimum if [PID correct. reverse] (PIC) = [No] (nO) and maximum if [PID correct. reverse] (PIC) = [Yes] (YES) The function is inactive if the PID function has not been configured or if tLS = 0 or if UPP = [No] (nO) or if rSL is active (not 0). **⚠ WARNING** **UNINTENDED EQUIPMENT OPERATION** Check that unintended restarts will not present any danger. **Failure to follow these instructions can result in death or serious injury.** Adjustment range: [No] (nO) or between [Min PID feedback] (PIF1) and [Max PID feedback] (PIF2) (2).		[No] (nO)

(1) If a graphic display terminal is not in use, values greater than 9,999 will be displayed on the 4-digit display with a period mark after the thousand digit, e.g., 15.65 for 15,650.

Sleeping on the basis of flow detection

Parameters can be accessed in [Expert] mode.

This function is only active when the motor frequency is less than [NoFlo.Freq.Thres.Ac.] (FFd).
This function is used in applications where zero flow cannot be detected by the sleep function alone. At periodic intervals (based on time [No Flow Period Det.] (nFd)), it forces the drive's frequency reference to [Low speed] (LSP) + [No Flow Offset] (LFd) in order to test for zero flow.

Set the sleep function so that the drive switches to sleep mode when zero flow is detected ([No Flow Offset] (LFd) ⩽ [Sleep Offset Thres.] (SLE) page 160).

The test can be carried out at underpressure or overpressure as appropriate for the type of installation.

Test at underpressure: (LSP + LFd) < FFd

- If the request is still present, the PID regulator error increases (at underpressure), causing the drive to restart at its previous speed above the sleep threshold.

.

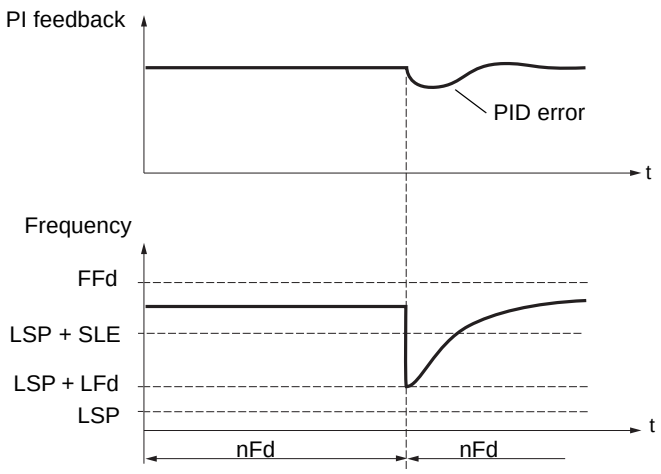

- If the request is no longer present (zero flow), the PID regulator error will not increase, and the speed will remain below the sleep threshold, thereby inducing a stop.

.

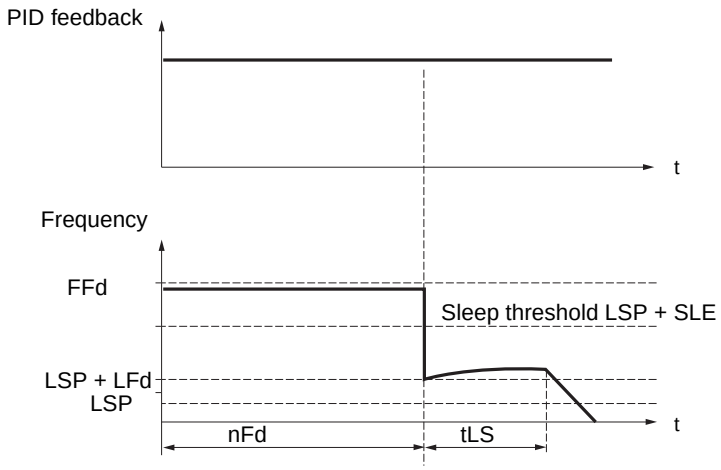

Test at overpressure: (LSP + LFd) > FFd

- If the request is still present, the PID regulator error increases (at overpressure), causing the drive to decelerate. If flow is detected, the speed will stabilize at its previous level, above the sleep threshold.

.

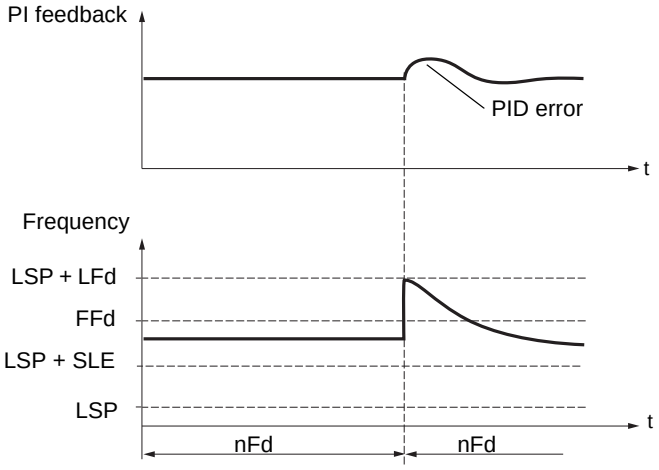

- If the request is no longer present (zero flow), the PID regulator error increases (at overpressure), causing the drive to decelerate. The absence of flow maintains the overpressure and the speed falls below the sleep threshold, causing the drive to stop.

.

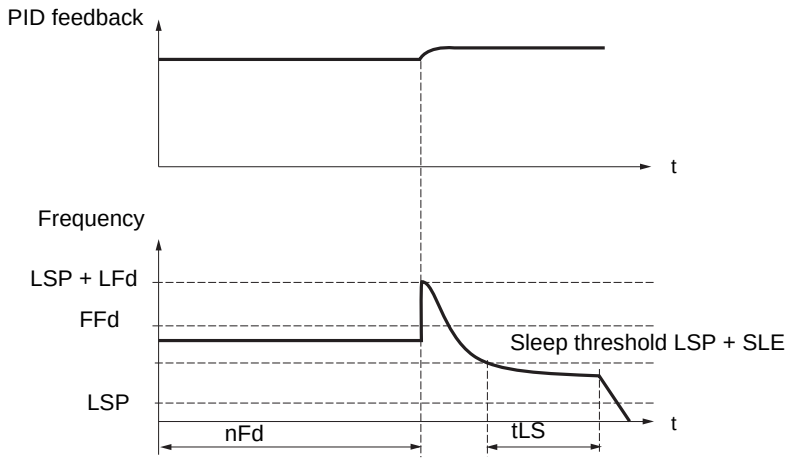

Parameters can be accessed in [Expert] mode.

Code	Name/Description	Adjustment range	Factory setting
	[SLEEPING / WAKE UP] (continued)		
nFd	**[No Flow Period Det.]**	0 to 20 min	0 min
	Zero flow detection interval, in minutes. The parameter can be accessed if [PID feedback ass.] (PIF) is not [No] (nO).		
FFd	**[NoFlo.Freq.Thres.Ac.]** (1)	0 to 500 or 599 Hz according to rating	0 Hz
	Zero flow detection activation threshold The parameter can be accessed if [PID feedback ass.] (PIF) is not [No] (nO) and if [No Flow Period Det.] (nFd) is not 0.		
LFd	**[No Flow Offset]** (1)	0 to 500 or 599 Hz according to rating	0 Hz
	Zero flow detection offset The parameter can be accessed if [PID feedback ass.] (PIF) is not [No] (nO) and if [No Flow Period Det.] (nFd) is not 0.		

(1) The parameter can also be accessed in the [1.3 SETTINGS] (SEt-) menu.

Parameter that can be modified during operation or when stopped.

Torque limitation

There are two types of torque limitation:

- With a value that is fixed by a parameter
- With a value that is set by an analog input (AI, pulse or encoder)

If both types are enabled, the lowest value is taken into account. The two types of limitation can be configured or switched remotely using a logic input or via the communication bus.

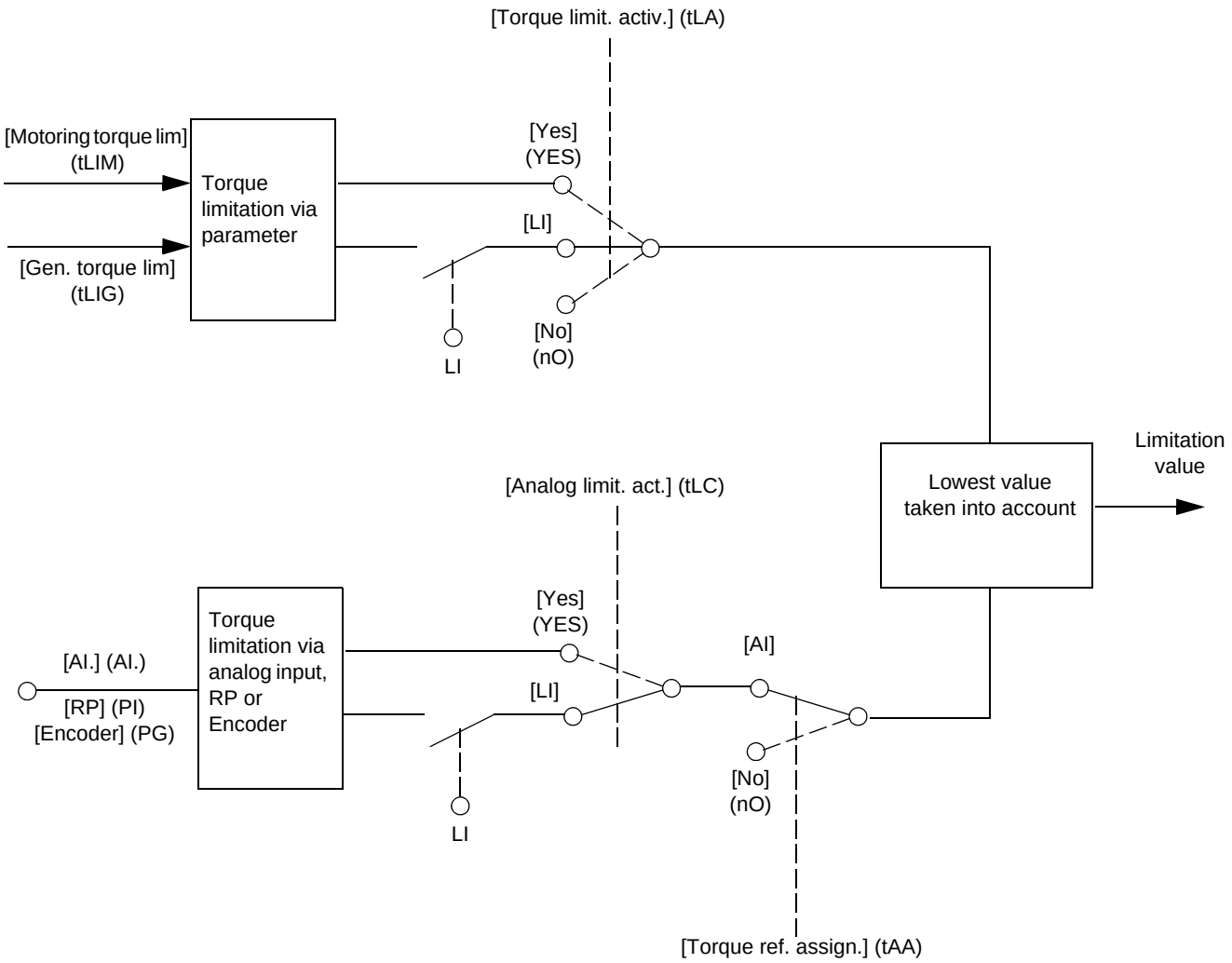

Code	Name/Description	Adjustment range	Factory setting
tOL-	**[TORQUE LIMITATION]** This function cannot be accessed in V/F profile mode.		
tLA nO YES LI1 - - -	**[Torque limit. activ.]** ☐ **[No]** (nO): Function inactive ☐ **[Yes]** (YES): Function always active ☐ **[LI1]** (LI1) : : ☐ **[...]** (...): See the assignment conditions on page 118. If the assigned input or bit is at 0, the function is inactive. If the assigned input or bit is at 1, the function is active.		[No] (nO)
IntP 0.1 1	**[Torque increment]** The parameter cannot be accessed if [Torque limit. activ.] (tLA) = [No] (nO). Selection of units for the [Motoring torque lim] (tLIM) and [Gen. torque lim] (tLIG) parameters ☐ **[0.1%]** (0.1): 0.1% unit ☐ **[1%]** (1): 1% unit		[1%] (1)
tLIM ( )	**[Motoring torque lim]** (1) The parameter cannot be accessed if [Torque limit. activ.] (tLA) = [No] (nO) Torque limitation in motor mode, as a whole % or in 0.1% increments of the rated torque in accordance with the [Torque increment] (IntP) parameter.	0 to 300%	100%
tLIG ( )	**[Gen. torque lim]** (1) The parameter cannot be accessed if [Torque limit. activ.] (tLA) = [No] (nO) Torque limitation in generator mode, as a whole % or in 0.1% increments of the rated torque in accordance with the [Torque increment] (IntP) parameter.	0 to 300%	100%
tAA nO AI1 - AI4 PI PG AIU1	**[Torque ref. assign.]** If the function is assigned, the limitation varies between 0% and 300% of the rated torque on the basis of the 0% to 100% signal applied to the assigned input. Examples: - 12 mA on a 4-20 mA input results in limitation to 150% of the rated torque. - 2.5 V on a 10 V input results in 75% of the rated torque. ☐ **[No]** (nO): Not assigned (function inactive) ☐ **[AI1]** (AI1) to **[AI4]** (AI4): Analog input, if VW3A3202 I/O card has been inserted ☐ **[RP]** (PI): Frequency input, if VW3A3202 I/O card has been inserted ☐ **[Encoder]** (PG): Encoder input, if encoder card has been inserted ☐ **[Network AI]** (AIU1): Virtual input via communication bus, to be configured via [AI net. channel] (AIC1) page 91 **⚠ WARNING** **UNINTENDED EQUIPMENT OPERATION** If the equipment switches to forced local mode (see page 218), the virtual input remains frozen at the last value transmitted. Do not use the virtual input and forced local mode in the same configuration. **Failure to follow this instruction can result in death or serious injury.**		[No] (nO)

(1) The parameter can also be accessed in the [1.3 SETTINGS] (SEt-) menu.

( ) Parameter that can be modified during operation or when stopped.

Code	Name/Description	Adjustment range	Factory setting
tLC yES LI1 - - -	❑ **[Analog limit. act.]** The parameter can be accessed if [Torque ref. assign.] (tAA) is not [No] (nO). ☐ **[Yes]** (YES): The limitation depends on the input assigned by [Torque ref. assign.] (tAA). ☐ **[LI1]** (LI1) : : ☐ **[...]** (...): See the assignment conditions on page 118. If the assigned input or bit is at 0: • The limit is specified by the [Motoring torque lim] (tLIM) and [Gen. torque lim] (tLIG) parameters if [Torque limit. activ.] (tLA) is not [No] (nO). • No limitation if [Torque limit. activ.] (tLA) = [No] (nO). If the assigned input or bit is at 1: • The limitation depends on the input assigned by [Torque ref. assign.] (tAA). **Note:** If [Torque limitation] (tLA) and [Torque ref. assign.] (tAA) are enabled at the same time, the lowest value will be taken into account.		[Yes] (YES)
tPMM ()	❑ **[Pmax Motor]** Maximum power in motor mode The parameter cannot be accessed if [Torque limit. activ.] (tLA) = [No] (nO)	10 to 300%	300%
tPMG ()	❑ **[Pmax Generator]** Maximum power in generator mode The parameter cannot be accessed if [Torque limit. activ.] (tLA) = [No] (nO)	10 to 300%	300%

Code	Name/Description	Adjustment range	Factory setting
CL1-	**[2nd CURRENT LIMIT.]**		
LC2 nO LI1 - - -	**[Current limit 2]** ☐ **[No]** (nO): Function inactive. ☐ **[LI1]** (LI1) : : ☐ **[...]** (...): See the assignment conditions on page 118. If the assigned input or bit is at 0, the first current limitation is active. If the assigned input or bit is at 1, the second current limitation is active.		[No] (nO)
CL2 (1)	**[I Limit. 2 value]** (1) Second current limitation The parameter can be accessed if [Current limit 2] (LC2) is not [No] (nO). **Note:** If the setting is less than 0.25 In, the drive may lock in [Output Phase Loss] (OPF) fault mode if this has been enabled (see page 196). If it is less than the no-load motor current, the limitation no longer has any effect. **CAUTION** Check that the motor will withstand this current, particularly in the case of permanent magnet synchronous motors, which are susceptible to demagnetization. **Failure to follow this instruction can result in equipment damage.**	0 to 1.1 or 1.2 In (2) according to rating	1.1 or 1.2 In (2) according to rating
CL1 (1)	**[Current Limitation]** (1) First current limitation **Note:** If the setting is less than 0.25 In, the drive may lock in [Output Phase Loss] (OPF) fault mode if this has been enabled (see page 196). If it is less than the no-load motor current, the limitation no longer has any effect. **CAUTION** Check that the motor will withstand this current, particularly in the case of permanent magnet synchronous motors, which are susceptible to demagnetization. **Failure to follow this instruction can result in equipment damage.**	0 to 1.1 or 1.2 In (2) according to rating	1.1 or 1.2 In (2) according to rating

(1) The parameter can also be accessed in the [1.3 SETTINGS] (SEt-) menu.
(2) In corresponds to the rated drive current indicated in the Installation Manual and on the drive nameplate.

Parameter that can be modified during operation or when stopped.

Line contactor command

Example circuit:

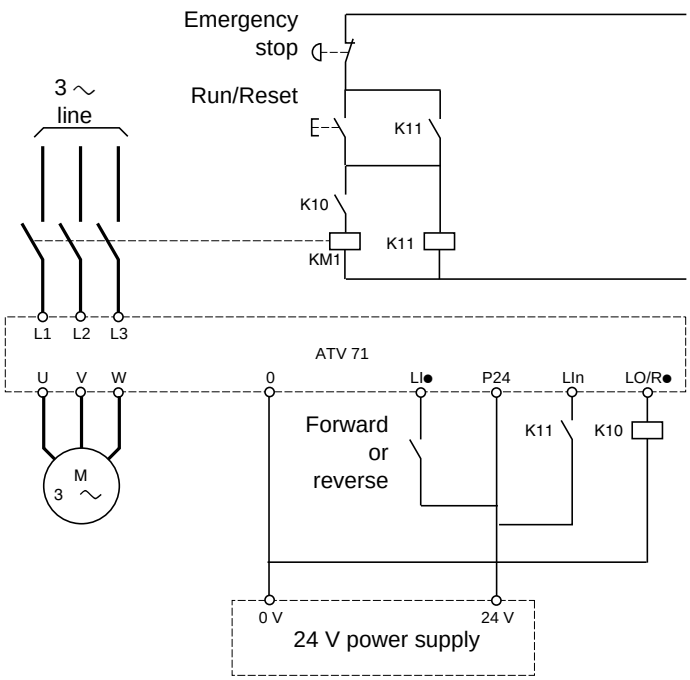

Note: The “Run/Reset” button must be pressed once the “Emergency stop” button has been released.

The drive control power supply must be provided via an external 24 V source.

CAUTION
This function can only be used for a small number of consecutive operations with a cycle time longer than 60 s (in order to avoid premature aging of the filter capacitor charging circuit). **Failure to follow these instructions can result in equipment damage.**

☞ **Note:** The line contactor closes every time a run command (forward or reverse) is sent and opens after every stop.

Code	Name/Description	Adjustment range	Factory setting
LLC-	**[LINE CONTACTOR COMMAND]**		
LLC	**[Line contactor ass.]** Logic output or control relay nO **[No]** (nO): Function not assigned (in this case, none of the function parameters can be accessed). LO1 **[LO1]** (LO1) - to LO4 **[LO4]** (LO4): Logic output (if one or two I/O cards have been inserted, LO1 to LO2 or LO4 can be selected). r2 **[R2]** (r2) - to r4 **[R4]** (r4): Relay (selection of R2 extended to R3 or R4 if one or two I/O cards have been inserted). dO1 **[dO1]** (dO1): Analog output AO1 functioning as a logic output. Selection can be made if [AO1 assignment] (AO1) page 105 = [No] (nO).		[No] (nO)
LES	**[Drive lock]** nO **[No]** (nO): Function inactive. LI1 **[LI1]** (LI1) - : - : - **[...]** (...): See the assignment conditions on page 118. The drive locks when the assigned input or bit changes to 0.		[No] (nO)
LCt	**[Mains V. time out]** Monitoring time for closing of line contactor. If, once this time has elapsed, there is no voltage on the drive power circuit, the drive will lock with an [input contactor] (LCF) fault.	5 to 999 s	5 s

Output contactor command

This allows the drive to control a contactor located between the drive and the motor. The request for the contactor to close is made when a run command is sent. The request for the contactor to open is made when there is no longer any current in the motor.

CAUTION
If a DC injection braking function has been configured it should not be left operating too long in stop mode, as the contactor only opens at the end of braking. **Failure to follow these instructions can result in equipment damage.**

Output contactor feedback

The corresponding logic input should be at 1 when there is no run command and at 0 during operation.
In the event of an inconsistency, the drive trips on an FCF2 fault if the output contactor fails to close (LIx at 1) and on an FCF1 fault if it is stuck (LIx at 0).
The parameter [Time to motor run] (dbS) can be used to delay tripping in fault mode when a run command is sent and the parameter [Time to open cont.] (dAS) delays the fault when a stop command is set.

Note:
Fault FCF2 (contactor failing to close) can be reset by the run command changing state from 1 to 0 (0 --> 1 --> 0 in 3-wire control).

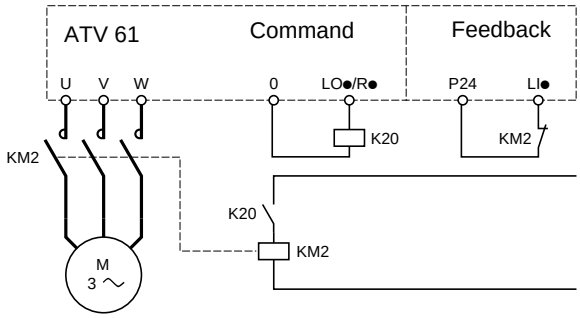

The [Out. contactor ass.] (OCC) and [Output contact. fdbk] (rCA) functions can be used individually or together.

Code	Name/Description	Adjustment range	Factory setting
OCC-	**[OUTPUT CONTACTOR CMD]**		
OCC	**[Out. contactor ass.]** Logic output or control relay nO ☐ **[No]** (nO): Function not assigned (in this case, none of the function parameters can be accessed). LO1 ☐ **[LO1]** (LO1) - to LO4 **[LO4]** (LO4): Logic output (if one or two I/O cards have been inserted, LO1 to LO2 or LO4 can be selected). r2 ☐ **[R2]** (r2) - to r4 **[R4]** (r4): Relay (selection of R2 extended to R3 or R4 if one or two I/O cards have been inserted) dO1 ☐ **[dO1]** (dO1): Analog output AO1 functioning as a logic output. Selection can be made if [AO1 assignment] (AO1) page 105 = [No] (nO).		[No] (nO)
rCA	**[Output contact. fdbk]** nO ☐ **[No]** (nO): Function inactive LI1 ☐ **[LI1]** (LI1) - : - : - ☐ **[...]** (...): See the assignment conditions on page 118. The motor starts up when the assigned input or bit changes to 0.		[No] (nO)
dbS	**[Time to motor run]** Time delay for: • Motor control following the sending of a run command • Output contactor fault monitoring, if the feedback is assigned. If the contactor fails to close at the end of the set time, the drive will lock in FCF2 fault mode. This parameter can be accessed if [Output cont.] (OCC) is assigned or if [Output contact. fdbk] (rCA) is assigned. The time delay must be greater than the closing time of the output contactor.	0.05 to 60 s	0.15
dAS	**[Time to open cont.]** Time delay for output contactor opening command following motor stop. This parameter can be accessed if [Output contact. fdbk] (rCA) is assigned. The time delay must be greater than the opening time of the output contactor. If it is set to 0, the fault will not be monitored. If the contactor fails to open at the end of the set time, the drive will lock in FCF1 fault mode.	0 to 5.00 s	0.10

Parameter that can be modified during operation or when stopped.

Damper control

This function applies to the ventilation ducts. The aim is to control the opening of the duct (shutter device called a "damper") when the fan starts up.

Damper opening command

The opening command can be assigned to a logic output or a relay via the [Damper assignment] (dAM)parameter. The damper is closed automatically when there is no longer an opening command.

Note: With Sleep/Wake-up function, DC injection braking function must be configured to close the damper automatically when the drive is in sleep mode.

Damper opening feedback

Opening is controlled by a bit or a logic input that can be assigned via the [Damper feedback] (dFb) parameter. The corresponding logic input or bit can be configured (state 0 or 1 for damper open) via the parameter [F.back dam. contact](Fbtd).
When there is an inconsistency, the drive trips on a [Damper stuck] (Fd1) fault if the damper does not open and on a [Damper open] (Fd2) fault if it does not close.
The parameter [Time to open damp.] (tOd) can be used to delay tripping on an opening fault when a run command is sent and the parameter [Time to close damp.] (tCd) delays the closing fault when a stop command is sent.

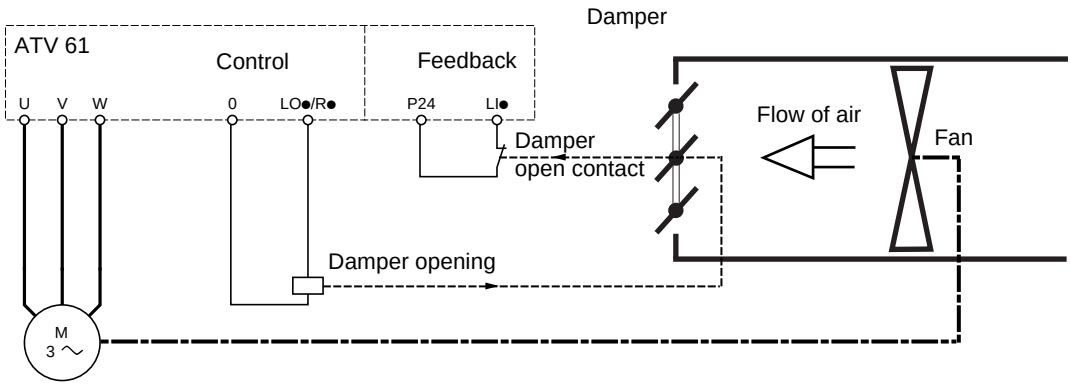

Example of operation with feedback at state 1 for damper open

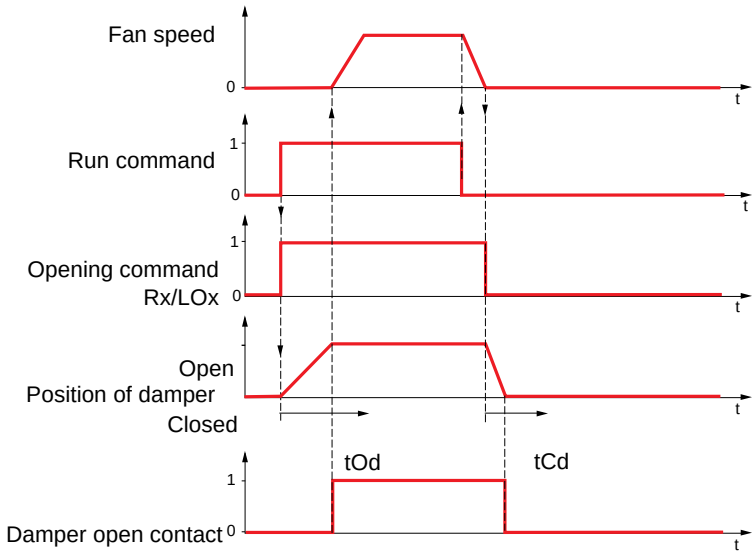

Code	Name/Description	Adjustment range	Factory setting
dAM-	**[DAMPER MANAGEMENT]**		
dAM	**[Damper assignment]** Logic output or opening control relay nO **[No]** (nO): Function not assigned (in this case, none of the function's parameters can be accessed) LO1 **[LO1]** (LO1) - to LO4 **[LO4]** (LO4): Logic output (if one or two I/O cards have been inserted, LO1 to LO2 or LO4 can be selected) r2 **[R2]** (r2) - to r4 **[R4]** (r4): Relay (selection of R2 extended to R3 or R4 if one or two I/O cards have been inserted) dO1 **[dO1]** (dO1): Analog output AO1 functioning as a logic output. Selection can be made if [AO1 assignment] (AO1) page 105 = [No] (nO).		[No] (nO)
dFb	**[Damper feedback]** Feedback of the "damper open" information nO **[No]** (nO): Function inactive LI1 **[LI1]** (LI1) - : - : - **[...]** (...) : See the assignment conditions on page 118. **Note:** Before assigning damper feedback, check that the input wiring or the state of the assigned bit corresponds to the configuration of parameter [F.back dam. contact] (Fbtd) below. If it does not, the drive may immediately switch to fault mode.		[No] (nO)
tOd	**[Time to open damp.]** Opening fault monitoring time delay. If the damper does not open at the end of the set time, the drive will lock in [Damper stuck] (Fd1) fault mode. The time delay must be greater than the normal opening time of the damper.	0.05 to 300 s	60
tCd	**[Time to close damp.]** Closing fault monitoring time delay. If the damper does not close at the end of the set time, the drive will lock in [Damper open.] (Fd1) fault mode. If this parameter is at 0.00, the [Damper open.] (Fd2) fault is monitored only at the run command before activation of the relay or the control logic output. The time delay must be greater than the normal closing time of the damper.	0.00 to 300 s	60
FbtD	**[F.back dam. contact]** This parameter defines the positive or negative logic of the input or bit assigned by [Damper feedback] (dFb). SHUt **[Active at 0]** (SHUt): The motor starts up when the assigned input or bit changes to 0. OPEn **[Active at 1]** (OPEn): The motor starts up when the assigned input or bit changes to 1.		[Active at 0] (SHUt)

Parameter that can be modified during operation or when stopped

Parameter set switching [PARAM. SET SWITCHING]

A set of 1 to 15 parameters from the [1.3 SETTINGS] (SEt-) menu on page 48 can be selected and 2 or 3 different values assigned. These 2 or 3 sets of values can then be switched using 1 or 2 logic inputs or control word bits. This switching can be performed during operation (motor running).
It can also be controlled on the basis of one or two frequency thresholds, whereby each threshold acts as a logic input (0 = threshold not attained, 1 = threshold attained).

	Values 1	Values 2	Values 3
Parameter 1 Parameter 2 Parameter 3 Parameter 4 Parameter 5 Parameter 6 Parameter 7 Parameter 8 Parameter 9 Parameter 10 Parameter 11 Parameter 12 Parameter 13 Parameter 14 Parameter 15	Parameter 1 Parameter 2 Parameter 3 Parameter 4 Parameter 5 Parameter 6 Parameter 7 Parameter 8 Parameter 9 Parameter 10 Parameter 11 Parameter 12 Parameter 13 Parameter 14 Parameter 15	Parameter 1 Parameter 2 Parameter 3 Parameter 4 Parameter 5 Parameter 6 Parameter 7 Parameter 8 Parameter 9 Parameter 10 Parameter 11 Parameter 12 Parameter 13 Parameter 14 Parameter 15	Parameter 1 Parameter 2 Parameter 3 Parameter 4 Parameter 5 Parameter 6 Parameter 7 Parameter 8 Parameter 9 Parameter 10 Parameter 11 Parameter 12 Parameter 13 Parameter 14 Parameter 15
Input LI or bit or frequency threshold 2 values	0	1	0 or 1
Input LI or bit or frequency threshold 3 values	0	0	1

☞ **Note:** Do not modify the parameters in the [1.3 SETTINGS] (SEt-) menu, because any modifications made in this menu will be lost on the next power-up. The parameters can be adjusted during operation in the [PARAM. SET SWITCHING] (MLP-) menu, on the active configuration.

Note: Parameter set switching cannot be configured from the integrated display terminal.
Parameters can only be adjusted on the integrated display terminal if the function has been configured previously via the graphic display terminal, by PC-Software or via the bus or communication network. If the function has not been configured, the **MLP-** menu and the **PS1-**, **PS2-**, **PS3-** submenus do not appear.

Code	Name/Description	Adjustment range	Factory setting
nLP-	**[PARAM. SET SWITCHING]**		
CHA1	**[2 Parameter sets]** ☐ **[No]** (nO): Function inactive. ☐ **[Freq.Th.att.]** (FtA): Switching via [Freq. threshold] (Ftd) page 60 ☐ **[Freq. Th. 2 attain.]** (F2A): Switching via [Freq. threshold 2] (Ftd) page 60 ☐ **[LI1]** (LI1) : : ☐ **[...]** (...): See the assignment conditions on page 118. Switching 2 parameter sets		[No] (nO)
CHA2	**[3 Parameter sets]** ☐ **[No]** (nO): Function inactive. ☐ **[Freq.Th.att.]** (FtA): Switching via [Freq. threshold] (Ftd) page 60 ☐ **[Freq. Th. 2 attain.]** (F2A): Switching via [Freq. threshold 2] (Ftd) page 60 ☐ **[LI1]** (LI1) : : ☐ **[...]** (...): See the assignment conditions on page 118. Switching 3 parameter sets **Note:** In order to obtain 3 parameter sets, [2 Parameter sets] must also be configured.		[No] (nO)
	[PARAMETER SELECTION] The parameter can only be accessed on the graphic display terminal if [2 Parameter sets] is not [No]. Making an entry in this parameter opens a window containing all the adjustment parameters that can be accessed. Select 1 to 15 parameters using ENT (a tick then appears next to the parameter). Parameter(s) can also be deselected using ENT. Example: PARAMETER SELECTION 1.3 SETTINGS Ramp increment ✓ - - - - - - - - - ☐ - - - - - - - - - ☐ - - - - - - - - - ✓		
PS1-	**[SET 1]** The parameter can be accessed if one or more parameters have been selected in [PARAMETER SELECTION]. Making an entry in this parameter opens a settings window containing the selected parameters **in the order in which they were selected**. With the graphic display terminal: RDY Term +0.00 Hz REM SET1 Acceleration : 9.51 s Deceleration : 9.67 s Acceleration 2 : 12.58 s Deceleration 2 : 13.45 s Begin Acc round : 2.3 s Code T/K ENT → RDY Term +0.00 Hz REM Acceleration 9.51 s Min = 0.1 Max = 999.9 << >> T/K With the integrated display terminal: Proceed as in the Settings menu using the parameters that appear.		

Code	Name/Description	Adjustment range	Factory setting
	[PARAM. SET SWITCHING] (continued)		
PS2-	**[SET 2]** The parameter can be accessed if one or more parameters have been selected in [PARAMETER SELECTION]. Procedure identical to [SET 1] (PS1-).		
PS3-	**[SET 3]** The parameter can be accessed if [3 parameter sets] is not [No] and if one or more parameters have been selected in [PARAMETER SELECTION]. Procedure identical to [SET 1] (PS1-).		

Note: We recommend that a parameter set switching test is carried out on stopping and a check is made to ensure that it has been performed correctly.
Some parameters are interdependent and in this case may be restricted at the time of switching.

Interdependencies between parameters must be respected, <u>even between different sets</u>.

Example: The highest [Low speed] (LSP) must be below the lowest [High speed] (HSP).

Motor or configuration switching [MULTIMOTORS/CONFIG.]

The drive may contain up to 3 configurations, which can be saved using the [1.12 FACTORY SETTINGS] (FCS-) menu, page 222.
Each of these configurations can be activated remotely, enabling adaptation to:

- 2 or 3 different motors or mechanisms (multimotor mode)
- 2 or 3 different configurations for a single motor (multiconfiguration mode)

The two switching modes cannot be combined.

Note: The following conditions MUST be observed:

- Switching may only take place when stopped (drive locked). If a switching request is sent during operation, it will not be executed until the next stop.
- In the event of motor switching, the following additional conditions apply:
  - When the motors are switched, the power and control terminals concerned must also be switched as appropriate.
  - The maximum power of the drive must not be exceeded by any of the motors.
- All the configurations to be switched must be set and saved in advance in the same hardware configuration, this being the definitive configuration (option and communication cards). Failure to follow this instruction can cause the drive to lock on an [Incorrect config.] (CFF) fault.

Menu and parameters switched in multimotor mode

- [1.3 SETTINGS] (SEt-)
- [1.4 MOTOR CONTROL] (drC-)
- [1.5 INPUTS / OUTPUTS CFG] (I-O-)
- [1.6 COMMAND] (CtL-)
- [1.7 APPLICATION FUNCT.] (FUn-) with the exception of the [MULTIMOTORS/CONFIG.] function (to be configured once only)
- [1.8 FAULT MANAGEMENT] (FLt)
- [1.13 USER MENU]
- [USER CONFIG.]: The name of the configuration specified by the user in the [1.12 FACTORY SETTINGS] (FCS-) menu

Menu and parameters switched in multiconfiguration mode

As in multimotor mode, except for the motor parameters that are common to the three configurations:

- Rated current
- Thermal current
- Rated voltage
- Rated frequency
- Rated speed
- Rated power
- Magnetizing current at zero frequency
- IR compensation
- Slip compensation
- Synchronous motor parameters
- Type of thermal protection
- Thermal state
- The auto-tuning parameters and motor parameters that can be accessed in expert mode
- Type of motor control

Note: No other menus or parameters can be switched.

Transfer of a drive configuration to another one, with graphic display terminal, when the drive uses [MULTIMOTORS/CONFIG.] function

Let A be the source drive and B the drive addressed. In this example, switching are controled by logic input.

1. Connect graphic display terminal to the drive A.
2. Put logic input LI ([2 Configurations] (CnF1)) and LI ([3 Configurations] (CnF2)) to 0.
3. Download configuration 0 in a file of graphic display terminal (example : file 1 of the graphic display terminal).
4. Put logic input LI ([2 Configurations] (CnF1)) to 1 and leave logic input LI ([3 Configurations] (CnF2)) to 0.
5. Download configuration 1 in a file of graphic display terminal (example : file 2 of the graphic display terminal).
6. Put logic input LI ([3 Configurations] (CnF2)) to 1 and leave logic input LI ([2 Configurations] (CnF1)) to 1.
7. Download configuration 2 in a file of graphic display terminal (example : file 3 of the graphic display terminal).
8. Connect graphic display terminal to the drive B.
9. Put logic input LI ([2 Configurations] (CnF1)) and LI ([3 Configurations] (CnF2)) to 0.
10. Make a factory setting of the drive B.
11. Download the configuration file 0 in the drive (file 1 of graphic display terminal in this example).
12. Put logic input LI ([2 Configurations] (CnF1)) to 1 and leave logic input LI ([3 Configurations] (CnF2)) to 0.
13. Download the configuration file 1 in the drive (file 2 of graphic display terminal in this example).
14. Put logic input LI ([3 Configurations] (CnF2)) to 1 and leave logic input LI ([2 Configurations] (CnF1)) to 1.
15. Download the configuration file 2 in the drive (file 3 of graphic display terminal in this example).

Nota: Steps 6, 7, 14 et 15 are necessary only if [MULTIMOTORS/CONFIG.] function is used with 3 configurations or 3 motors.

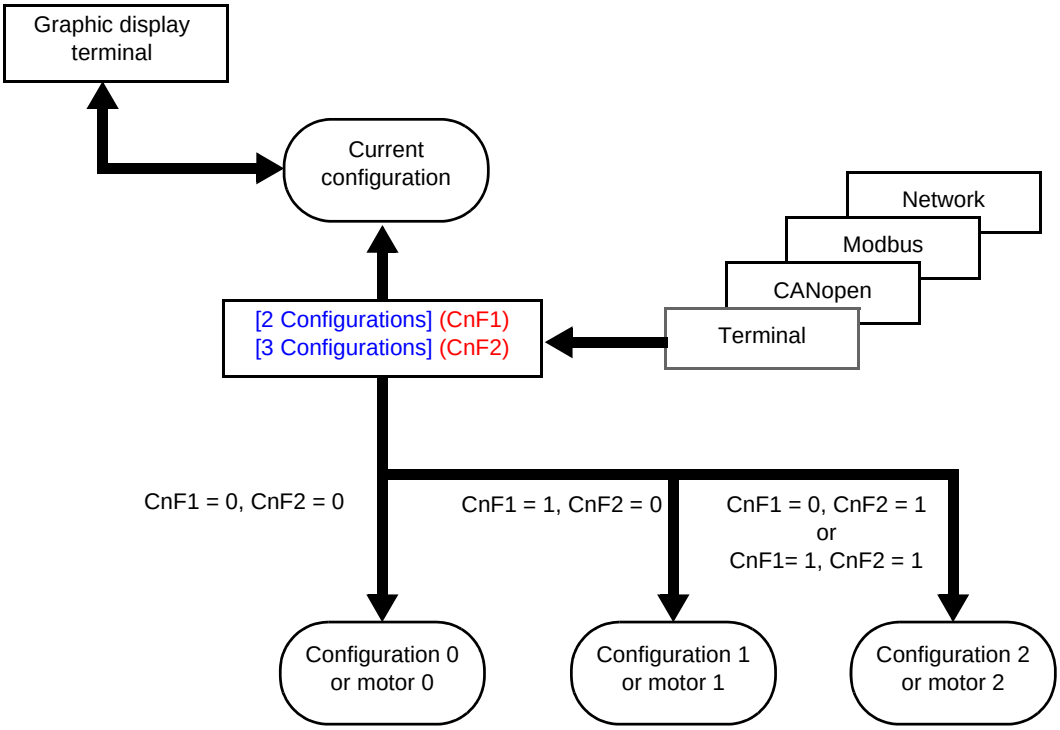

Switching command

Depending on the number of motors or selected configuration (2 or 3), the switching command is sent using one or two logic inputs. The table below lists the possible combinations.

LI 2 motors or configurations	LI 3 motors or configurations	Number of configuration or active motor
0	0	0
1	0	1
0	1	2
1	1	2

Schematic diagram for multimotor mode

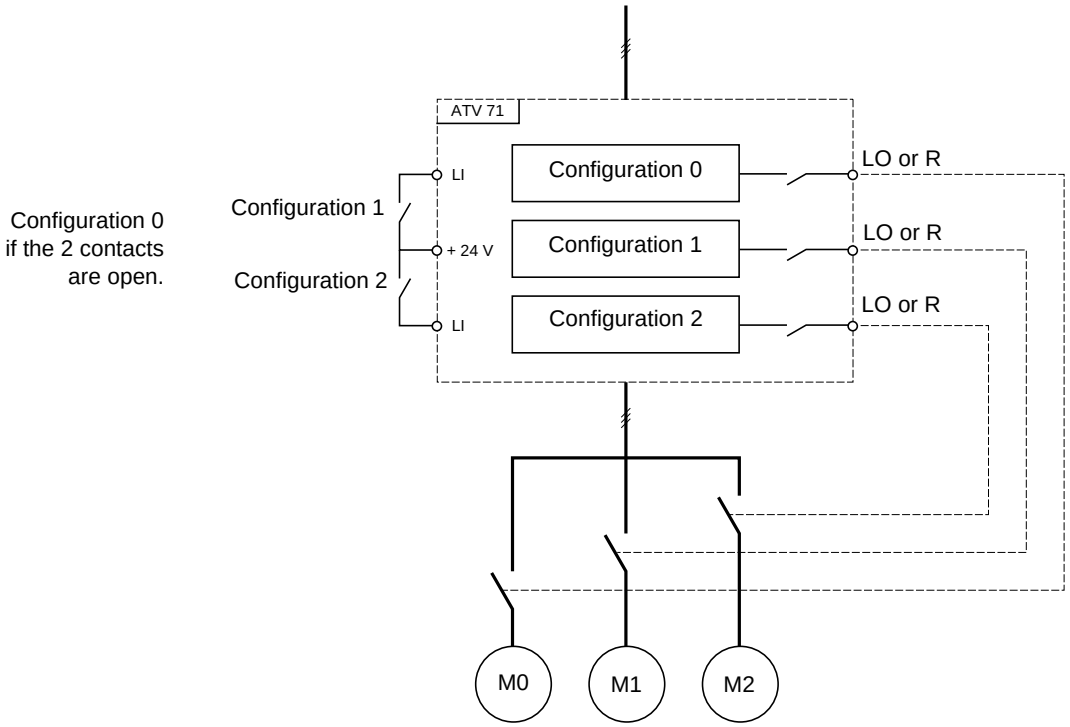

Auto-tuning in multimotor mode

This auto-tuning can be performed:

- Manually using a logic input when the motor changes
- Automatically each time the motor is activated for the 1st time after switching on the drive, if the [Automatic autotune] (AUt) parameter on page 67 = [Yes] (YES).

Motor thermal states in multimotor mode:

The drive protects the three motors individually. Each thermal state takes into account all stop times, including drive shutdowns.
It is therefore not necessary to perform auto-tuning every time the power is switched on. It is sufficient to auto-tune each motor at least once.

Configuration information output

In the [1.5 INPUTS / OUTPUTS CFG] (I-O-) menu, a logic output can be assigned to each configuration or motor (2 or 3) for remote information transmission.

☞ **Note:** As the [1.5 INPUTS / OUTPUTS CFG] (I-O-) menu is switched, these outputs must be assigned in all configurations in which information is required.

Code	Name/Description	Adjustment range	Factory setting
nnC-	**[MULTIMOTORS/CONFIG.]**		
CHn nO YES	**[Multimotors]** ☐ **[No]** (nO): Multiconfiguration possible ☐ **[Yes]** (YES): Multimotor possible		[No] (nO)
CnF1 nO LI1 - - C111 - - -	**[2 Configurations]** ☐ **[No]** (nO): No switching. ☐ **[LI1]** (LI1) to **[LI6]** (LI6) ☐ **[LI7]** (LI7) to **[LI10]** (LI10): If VW3A3201 logic I/O card has been inserted ☐ **[LI11]** (LI11) to **[LI14]** (LI14): If VW3A3202 extended I/O card has been inserted ☐ **[C111]** (C111) to **[C115]** (C115): With integrated Modbus ☐ **[C211]** (C211) to **[C215]** (C215): With integrated CANopen ☐ **[C311]** (C311) to **[C315]** (C315): With a communication card ☐ **[C411]** (C411) to **[C415]** (C415): With a Controller Inside card Switching of 2 motors or 2 configurations		[No] (nO)
CnF2 nO LI1 - - C111 - - -	**[3 Configurations]** ☐ **[No]** (nO): No switching ☐ **[LI1]** (LI1) to **[LI6]** (LI6) ☐ **[LI7]** (LI7) to **[LI10]** (LI10): If VW3A3201 logic I/O card has been inserted ☐ **[LI11]** (LI11) to **[LI14]** (LI14): If VW3A3202 extended I/O card has been inserted ☐ **[C111]** (C111) to **[C115]** (C115): With integrated Modbus ☐ **[C211]** (C211) to **[C215]** (C215): With integrated CANopen ☐ **[C311]** (C311) to **[C315]** (C315): With a communication card ☐ **[C411]** (C411) to **[C415]** (C415): With a Controller Inside card Switching of 3 motors or 3 configurations **Note:** In order to obtain 3 motors or 3 configurations, [2 Configurations] (CnF1) must also be configured.		[No] (nO)
tnL-	**[AUTO TUNING BY LI]**		
tUL nO LI1 - - -	**[Auto-tune assign.]** ☐ **[No]** (nO): Not assigned ☐ **[LI1]** (LI1) : : ☐ **[...]** (...): See the assignment conditions on page 118. Auto-tuning is performed when the assigned input or bit changes to 1. ☞ **Note:** Auto-tuning causes the motor to start up.		[No] (nO)

Zero fluid or zero flow detection via sensor

In the case of a pump, for example, this function can be used to avoid operation when there is no fluid or if the conduits are blocked. Although this function is independent of the “[1.7 APPLICATION FUNCT.] (FUn-)” function on page 162, the two can be used in tandem.

The function uses a fluid sensor assigned to a logic input or a bit, which can be configured for positive or negative logic by [Conf.sensor flow] (LnS).
The fault is triggered if the frequency exceeds an adjustable threshold [Freq.Th.Sensor. Act.] (nFFt) and the input or bit assigned to the sensor changes to 0 or 1 depending on its configuration.
The fault is ignored on startup for an adjustably time delay [Flow Times Ctrl] (nFSt) in order to avoid untimely triggering due to a transient state.

This fault triggers a freewheel stop.

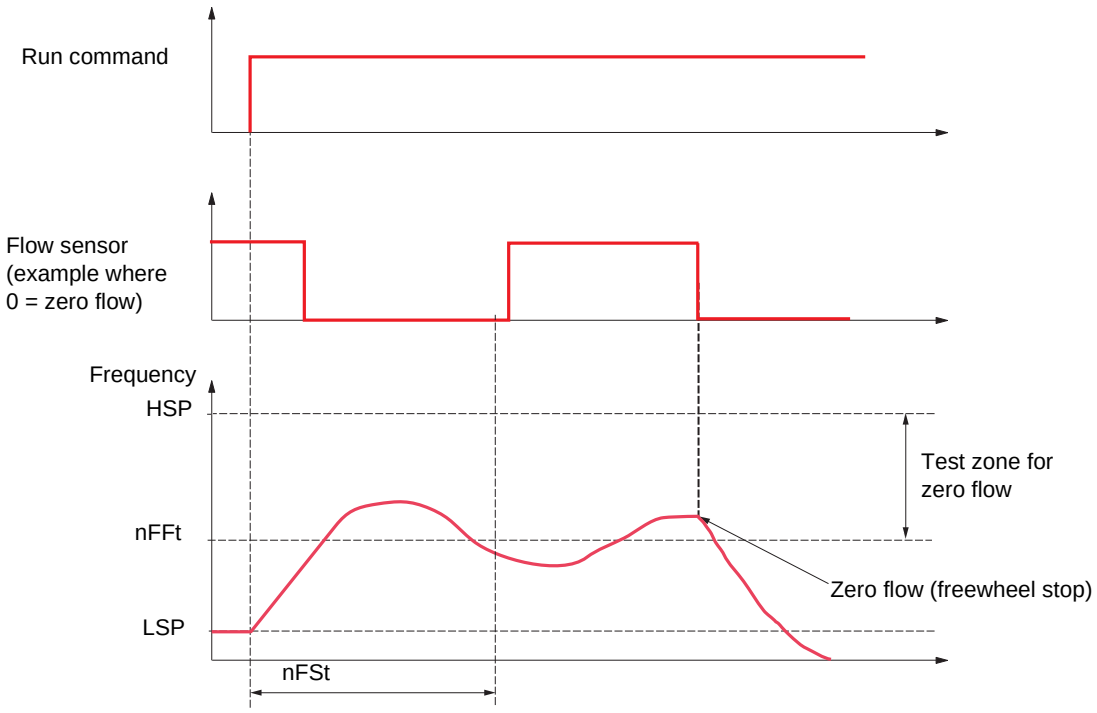

Code	Name/Description	Adjustment range	Factory setting
nFS-	**[NO FLOW DETECTION]**		
nFS	**[No Flow Sensor]**		[No] (nO)
	Assignment of the zero fluid sensor. nO ☐ **[No]** (nO): Function inactive LI1 ☐ **[LI1]** (LI1) to **[LI6]** (LI6) - ☐ **[LI7]** (LI7) to **[LI10]** (LI10): If VW3A3201 logic I/O card has been inserted - ☐ **[LI11]** (LI11) to **[LI14]** (LI14): If VW3A3202 extended I/O card has been inserted C101 ☐ **[C101]** (C101) to **[C115]** (C115): With integrated Modbus in [I/O profile] (IO) - ☐ **[C201]** (C201) to **[C215]** (C215): With integrated CANopen in [I/O profile] (IO) - ☐ **[C301]** (C301) to **[C315]** (C315): With a communication card in [I/O profile] (IO) - ☐ **[C401]** (C401) to **[C415]** (C415): With a Controller Inside card in [I/O profile] (IO) Cd00 ☐ **[CD00]** (Cd00) to **[CD13]** (Cd13): In [I/O profile] (IO) can be switched with possible logic inputs - ☐ **[CD14]** (Cd14) to **[CD15]** (Cd15): In [I/O profile] (IO) can be switched without logic inputs		
LnS	**[Conf.sensor flow]**		[Active low] (LO)
	This parameter can be accessed if zero flow detection has been assigned to a logic input or a bit. It defines the positive or negative logic of the input or bit assigned to this detection. LO ☐ **[Active low]** (LO): Detection on falling edge (change from 1 to 0) of the assigned input or bit. HIG ☐ **[Active high]** (HIG): Detection on rising edge (change from 0 to 1) of the assigned input or bit.		
nFFt	**[Freq.Th.Sensor. Act.]** (1)	0 to 500 or 599 Hz according to rating	0 Hz
	Zero fluid detection activation threshold The parameter can be accessed if [No Flow Sensor] (nFS) is not [No] (nO).		
nFSt	**[Flow Times Ctrl]** (1)	0 to 999 s	10 s
	Zero fluid detection activation time delay The parameter can be accessed if [No Flow Sensor] (nFS) is not [No] (nO).		

(1) The parameter can also be accessed in the [1.3 SETTINGS] (SEt-) menu.

Parameter that can be modified during operation or when stopped.

Flow limitation

This function can be used to limit the flow of a fluid, in the case of a pump, for example.
The function uses a flow sensor assigned to an analog input, the “pulse in” input or the encoder input. It limits the frequency reference. In the case of regulation with PID, it affects the PID regulator output reference.

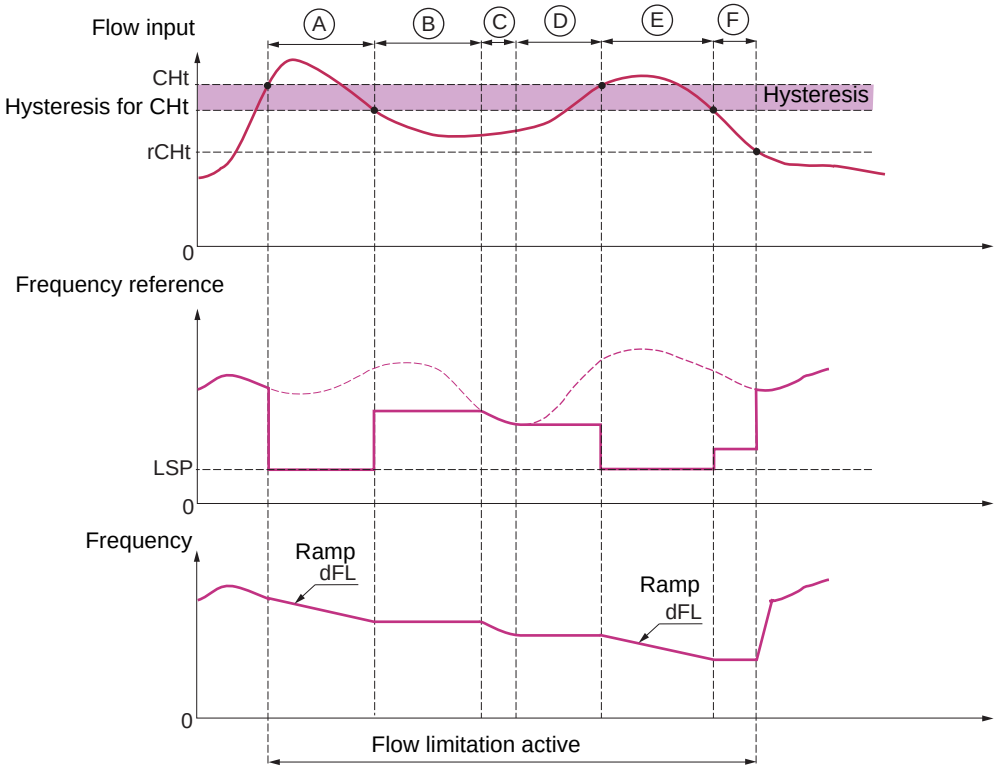

- **Before A** – The signal on the input assigned to the flow measurement has not reached the activation threshold [Flow.Lim.Th.Active] (CHt): Flow limitation is not activated and the input reference is applied.
- **A –** The signal on the input assigned to the flow measurement has reached the threshold [Flow.Lim.Th.Active] (CHt): Flow limitation is activated, the reference is limited to [Low speed] (LSP) and the frequency decelerates along the ramp [Dec. Flow. limit] (dFL).
- **B** – The signal on the input assigned to the flow measurement has fallen below the hysteresis of the threshold [Flow.Lim.Th.Active] (CHt): The current frequency is copied and applied as the reference.
- **C** – The input reference has fallen below the reference **B** and is continuing to fall: It is applied.
- **D** – The input reference starts to rise again: The current frequency is copied and applied as the reference.
- **E** – The signal on the input assigned to the flow measurement has reached the threshold [Flow.Lim.Th.Active] (CHt): The reference is limited to [Low speed] (LSP) and the frequency decelerates along the ramp [Dec. Flow. limit] (dFL).
- **F** – The signal on the input assigned to the flow measurement has fallen below the hysteresis of the threshold [Flow.Lim.Th.Active] (CHt): The current frequency is copied and applied as the reference.
- **After F** – The signal on the input assigned to the flow measurement has fallen below the deactivation threshold [Flo.Lim.Thres. Inact.] (rCHt): Flow limitation is no longer active and the input reference is applied.

Code	Name/Description	Adjustment range	Factory setting
FLL-	**[FLOW LIMITATION]**		
CHI nO AI1 - AI4 PI PG	**[Flow.Sen.Inf]** ☐ **[No]** (nO): Not assigned (function inactive) ☐ **[AI1]** (AI1) to **[AI4]** (AI4): Analog input, if VW3A3202 I/O card has been inserted ☐ **[RP]** (PI): Frequency input, if VW3A3202 I/O card has been inserted ☐ **[Encoder]** (PG): Encoder input, if encoder card has been inserted		[No] (nO)
CHt (1)	**[Flow.Lim.Th.Active]** (1) The parameter can be accessed if [Flow.Sen.Inf] (CHI) is not [No] (nO). Function activation threshold, as a % of the max. signal of the assigned input	0 to 100%	0%
rCHt (1)	**[Flo.Lim.Thres. Inact.]** (1) The parameter can be accessed if [Flow.Sen.Inf] (CHI) is not [No] (nO). Function deactivation threshold, as a % of the max. signal of the assigned input	0 to 100%	0%
dFL (1)	**[Dec. Flow. limit]** (1) The parameter can be accessed if [Flow.Sen.Inf] (CHI) is not [No] (nO). Time to decelerate from the [Rated motor freq.] (FrS) to 0. Make sure that this value is compatible with the inertia being driven.	0.01 to 9,000 s (2)	5.0 s

(1) The parameter can also be accessed in the [1.3 SETTINGS] (SEt-) menu.
(2) Range 0.01 to 99.99 s or 0.1 to 999.9 s or 1 to 9,000 s according to [Ramp increment] (Inr) page 131.

(1) Parameter that can be modified during operation or when stopped.

Direct power supply via DC bus

This function is only accessible for ATV61●●●M3 ⩾ 18.5 kW, ATV61●●●N4 ⩾ 22 kW drives and all ratings of ATV61●●●Y drives.

Direct power supply via the DC bus requires a protected direct current source with adequate power and voltage as well as a suitably dimensioned resistor and capacitor precharging contactor. Consult Schneider Electric for information about dimensioning these components.

The “direct power supply via DC bus” function can be used to control the precharging contactor via a relay or a logic input on the drive.

Example circuit using R2 relay:

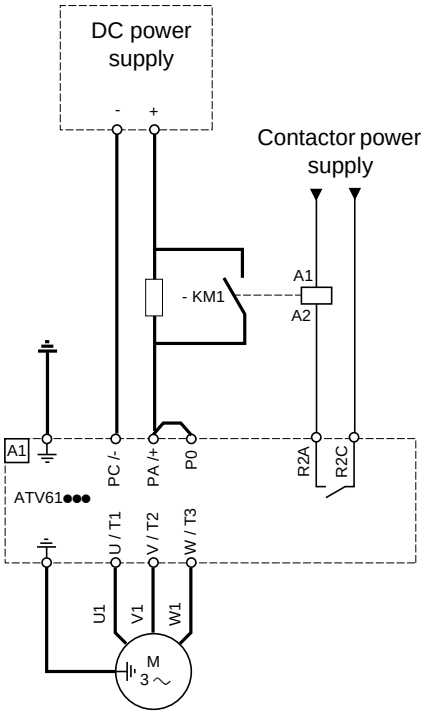

Code	Name/Description	Adjustment range	Factory setting
dCO-	**[DC BUS SUPPLY]** This function is only accessible for ATV61●●●M3 ⩾ 18.5 kW, ATV61●●●N4 ⩾ 22 kW drives and all ratings of ATV61●●●Y drives.		
dCO	**[Precharge cont. ass.]** Logic output or control relay nO □ **[No]** (nO): Function not assigned. LO1 □ **[LO1]** (LO1) - to LO4 **[LO4]** (LO4): Logic output (if one or two I/O cards have been inserted, LO1 to LO2 or LO4 can be selected). r2 □ **[R2]** (r2) - to r4 **[R4]** (r4): Relay (selection of R2 extended to R3 or R4 if one or two I/O cards have been inserted). dO1 □ **[dO1]** (dO1): Analog output AO1 functioning as a logic output. Selection can be made if [AO1 assignment] (AO1) page 105 = [No] (nO).		[No] (nO)

Active Front End connection

This function is not accessible for ATV61H●●●S6X ⩾ and for ATV61H●●●Y ⩾ 110 kW (150 HP). (HHP range)

Direct power supply via Active Front End (AFE) reduces the mains current harmonics to less than 4% and gives enables the drive to feedback the generative energy to the mains supply.

Example circuit using one AFE for one ATV61

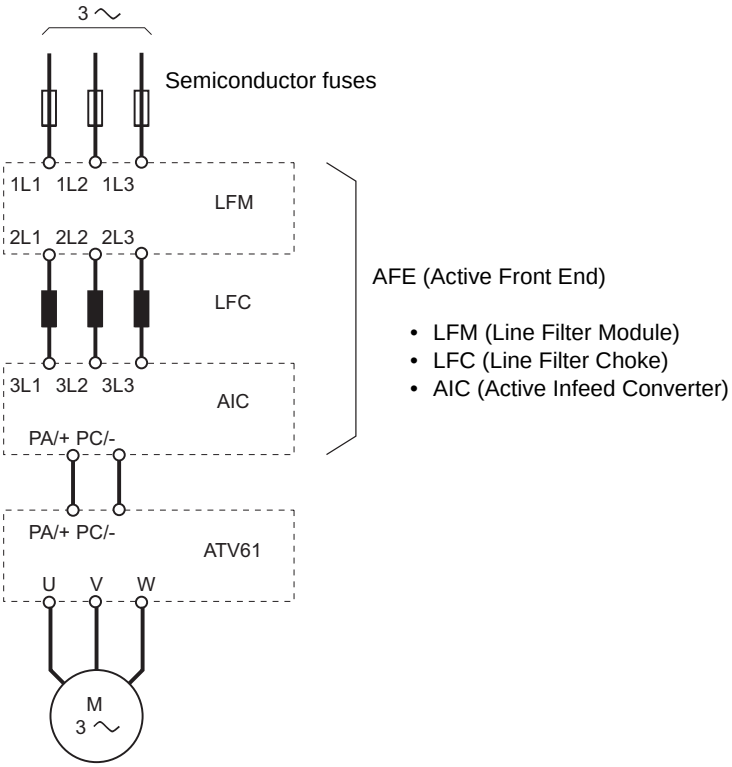

Code	Name/Description	Adjustment range	Factory setting
AFE-	**[REGEN CONNECTION]**		
Dir	❑ **[Regen. Connection]** ☐ **[No]** (nO): Not assigned ☐ **[Yes]** (YES): Function always active ☐ **[LI1]** (LI1) to **[LI6]** (LI6) ☐ **[LI7]** (LI7) to **[LI10]** (LI10): If VW3A3201 logic I/O card has been inserted ☐ **[LI11]** (LI11) to **[LI14]** (LI14): If VW3A3202 extended I/O card has been inserted ☐ **[C101]** (C101) to **[C115]** (C115): With integrated Modbus in [I/O profile] (IO) ☐ **[C201]** (C201) to **[C215]** (C215): With integrated CANopen in [I/O profile] (IO) ☐ **[C301]** (C301) to **[C315]** (C315): With a communication card in [I/O profile] (IO) ☐ **[C401]** (C401) to **[C415]** (C415): With a Controller Inside card in [I/O profile] (IO) ☐ **[CD00]** (Cd00) to **[CD13]** (Cd15): In [I/O profile] (IO) it can be switched with possible logic inputs ☐ **[CD14]** (Cd14) to **[CD15]** (Cd15): In [I/O profile] (IO) it can be switched without logic inputs If [Profile] (CHCF) = [8 serie] (SE8), then only [Yes] (YES) and [LIx] (LIx) are available		[No] (nO)

nO
YES
LI1
-
-
C101
-
-
-
Cd00
-

⚠ CAUTION

DAMAGED EQUIPMENT

It is absolutely necessary to carry out further parameter setting on all ATV61 drive connnected to Active Front End (AFE). Check the list of parameter on next page.

Failure to follow this instruction can result in equipment damage.

Active Front End connection

It is necessary to carry out the following settings for all frequency inverters connected to an active front end:

- Parameter [Mains voltage] (UrES) : Same setting as the active front end (Thereby the internal voltage levels of the frequency inverter are adapted).
- Parameter [Input phase loss] (IPL) has to be set to [Ignore] (nO).
- Parameter for operation with active front end [Regen. Connection] (AFE) has to be set to [Yes] (YES) (Thereby the undervoltage level of the frequency inverter is adapted to the operation with the active front end).
- Parameter [Dec ramp adapt.] (brA) is set to [nO] to inactivate this function.
- Parameter [Brake res. fault Mgt] (bUb) has to be set to [ignore] (nO) (for HHP range only).
- Parameter [Deceleration] (dEC) has to be increased for applications with high inertia to avoid overload of Active Front End. This can be prevented also by rounding the deceleration ramp with parameter [Begin Dec round] (tA3).
- Parameter [2 wire type] (tCt) has to be set on [Level] (LEL) to ensure an automatic restart after undervoltage detection of the Active Front End. An automatic restart is only possible on 2 wire control.
- The integrated RFI filter has to be always deactivated (position IT, non-grounded mains) for all ATV 61 inverter and also for the Active Infeed Converter (AIC) because there exists no direct mains connection.

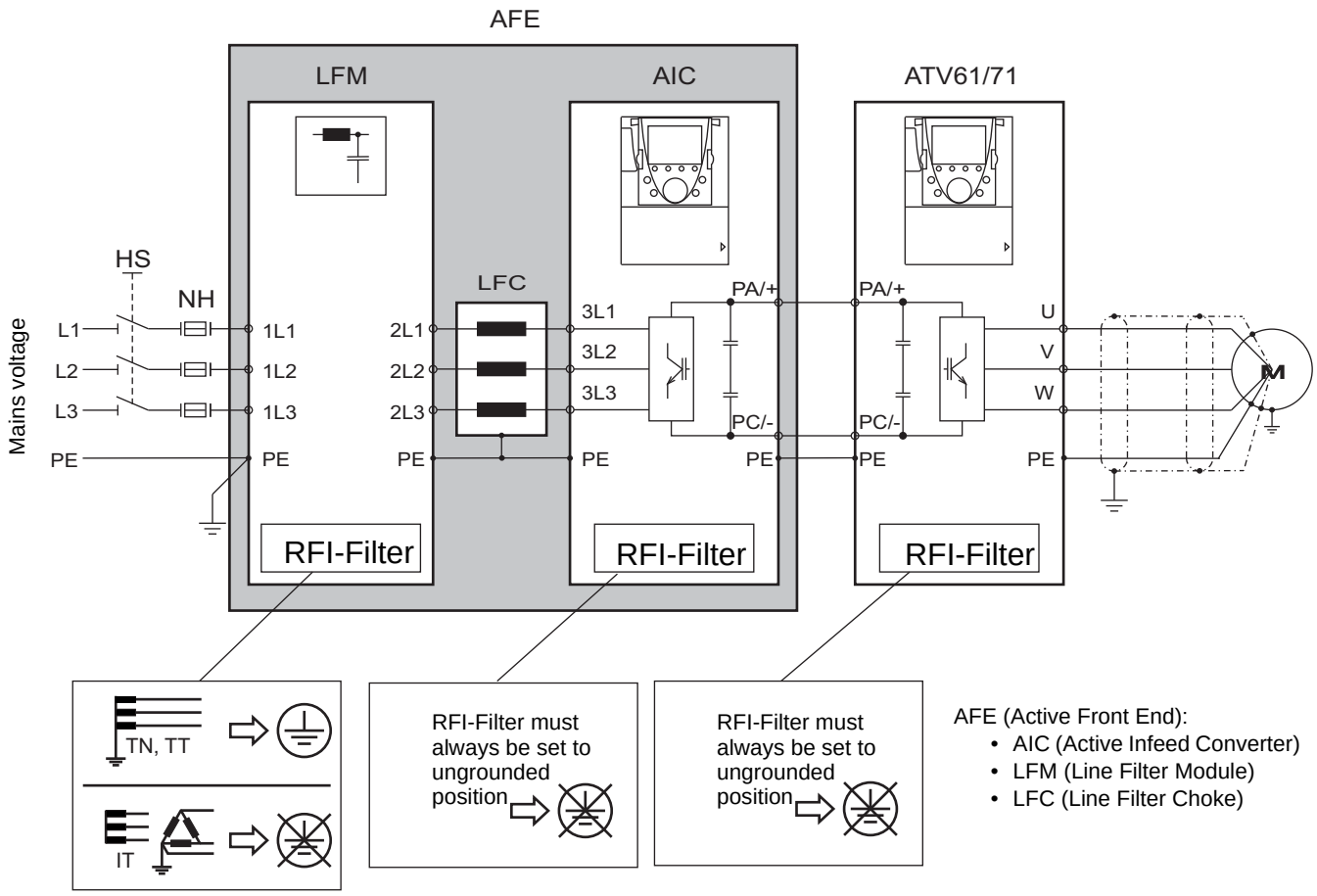

[1.8 FAULT MANAGEMENT] (FLt-)

With graphic display terminal:

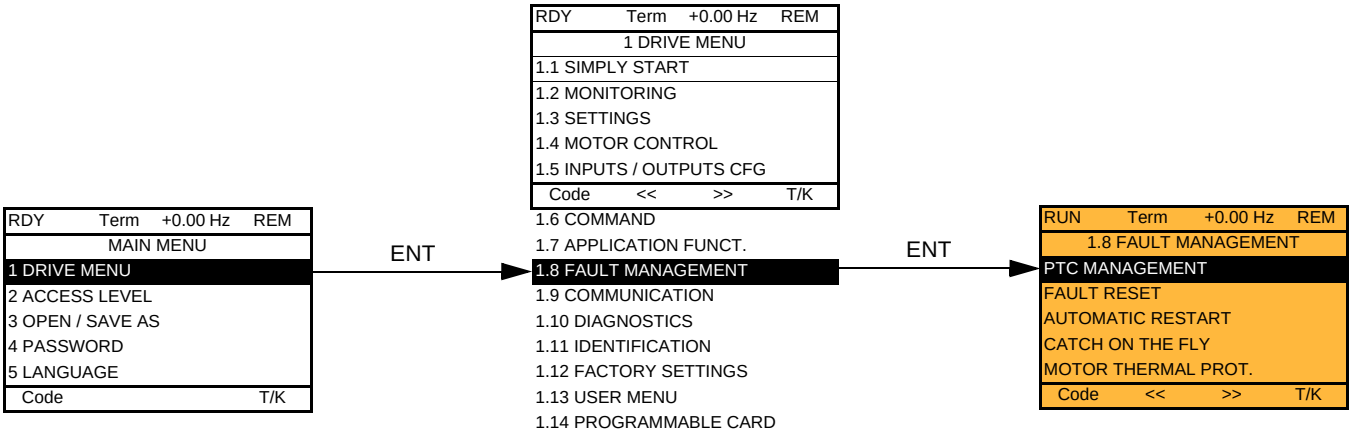

With integrated display terminal:

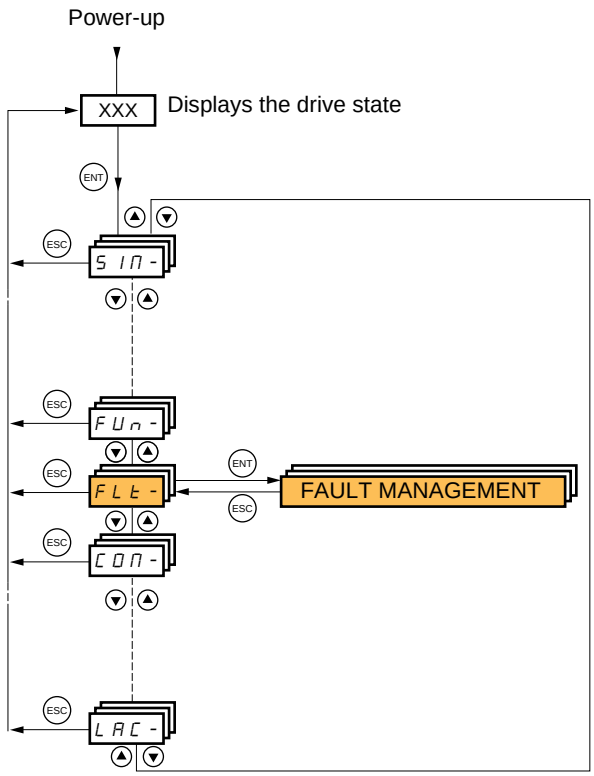

Summary of functions:

Code	Name	Page
PtC-	[PTC MANAGEMENT]	191
rSt-	[FAULT RESET]	192
Atr-	[AUTOMATIC RESTART]	193
FLr-	[CATCH ON THE FLY]	194
tHt-	[MOTOR THERMAL PROT.]	196
OPL-	[OUTPUT PHASE LOSS]	196
IPL-	[INPUT PHASE LOSS]	197
OHL-	[DRIVE OVERHEAT]	197
SAt-	[THERMAL ALARM STOP]	198
EtF-	[EXTERNAL FAULT]	199
USb-	[UNDERVOLTAGE MGT]	200
tIt-	[IGBT TESTS]	201
LFL-	[4-20mA LOSS]	202
InH-	[FAULT INHIBITION]	203
CLL-	[COM. FAULT MANAGEMENT]	204
tId-	[TORQUE OR I LIM. DETECT.]	205
FqF-	[FREQUENCY METER]	207
brP-	[DB RES. PROTECTION]	208
bUF-	[BU PROTECTION]	208
tnF-	[AUTO TUNING FAULT]	208
PPI-	[CARDS PAIRING]	209
ULd-	[PROCESS UNDERLOAD]	211
OLd-	[PROCESS OVERLOAD]	212
FdL-	[DAMPER FAULT MGT.]	213
LFF-	[FALLBACK SPEED]	214
FSt-	[RAMP DIVIDER]	214
dCI-	[DC INJECTION]	214

[1.8 FAULT MANAGEMENT] (FLt-)

The parameters in the [1.8 FAULT MANAGEMENT] (FLt-) menu can only be modified when the drive is stopped and there is no run command, except for parameters with a ↻ symbol in the code column, which can be modified with the drive running or stopped.

PTC probes

3 sets of PTC probes can be managed by the drive in order to protect the motors:

- 1 on logic input LI6 converted for this use by switch “**SW2**” on the control card.
- 1 on each of the 2 option cards VW3A3201 and VW3A3202.

Each of these sets of PTC probes is monitored for the following faults:

- Motor overheating
- Sensor break fault
- Sensor short-circuit fault

Protection via PTC probes does not disable protection via I^2t calculation performed by the drive (the two types of protection can be combined).

Code	Name/Description	Adjustment range	Factory setting
PtC-	**[PTC MANAGEMENT]**		
PtCL nO AS rdS rS	**[LI6 = PTC probe]** Can be accessed if switch **SW2** on the control card is set to PTC. ☐ **[No]** (nO): Not used ☐ **[Always]** (AS): “PTC probe” faults are monitored permanently, even if the power supply is not connected (as long as the control remains connected to the power supply). ☐ **[Power ON]** (rdS): “PTC probe” faults are monitored while the drive power supply is connected. ☐ **[Motor ON]** (rS): “PTC probe” faults are monitored while the motor power supply is connected.		[No] (nO)
PtC1 nO AS rdS rS	**[PTC1 probe]** Can be accessed if a VW3A3201 option card has been inserted. ☐ **[No]** (nO): Not used ☐ **[Always]** (AS): “PTC probe” faults are monitored permanently, even if the power supply is not connected (as long as the control remains connected to the power supply). ☐ **[Power ON]** (rdS): “PTC probe” faults are monitored while the drive power supply is connected. ☐ **[Motor ON]** (rS): “PTC probe” faults are monitored while the motor power supply is connected.		[No] (nO)
PtC2 nO AS rdS rS	**[PTC2 probe]** Can be accessed if a VW3A3202 option card has been inserted. ☐ **[No]** (nO): Not used ☐ **[Always]** (AS): “PTC probe” faults are monitored permanently, even if the power supply is not connected (as long as the control remains connected to the power supply). ☐ **[Power ON]** (rdS): “PTC probe” faults are monitored while the drive power supply is connected. ☐ **[Motor ON]** (rS): “PTC probe” faults are monitored while the motor power supply is connected.		[No] (nO)

Code	Name/Description	Adjustment range	Factory setting
rSt-	**[FAULT RESET]**		
rSF	**[Fault reset]**		[LI4] (LI4)
	Manual fault reset ☐ **[No]** (nO): Function inactive ☐ **[LI1]** (LI1) to **[LI6]** (LI6) ☐ **[LI7]** (LI7) to **[LI10]** (LI10): If VW3A3201 logic I/O card has been inserted ☐ **[LI11]** (LI11) to **[LI14]** (LI14): If VW3A3202 extended I/O card has been inserted ☐ **[C101]** (C101) to **[C115]** (C115): With integrated Modbus in [I/O profile] (IO) ☐ **[C201]** (C201) to **[C215]** (C215): With integrated CANopen in [I/O profile] (IO) ☐ **[C301]** (C301) to **[C315]** (C315): With a communication card in [I/O profile] (IO) ☐ **[C401]** (C401) to **[C415]** (C415): With a Controller Inside card in [I/O profile] (IO) ☐ **[CD00]** (Cd00) to **[CD13]** (Cd13): In [I/O profile] (IO) can be switched with possible logic inputs ☐ **[CD14]** (Cd14) to **[CD15]** (Cd15): In [I/O profile] (IO) can be switched without logic inputs Faults are reset when the assigned input or bit changes to 1, if the cause of the fault has disappeared. The STOP/RESET button on the graphic display terminal performs the same function. See pages 242 to 246 for the list of faults that can be reset manually.		
rP	**[Product reset]**		[No] (nO)
	Parameter can only be accessed in [ACCESS LEVEL] = [Expert] mode. Drive reinitialization. Can be used to reset all faults without having to disconnect the drive from the power supply. ☐ **[No]** (nO): Function inactive ☐ **[Yes]** (YES): Reinitialization. Press and hold down the "ENT" key for 2 s. The parameter changes back to [No] (nO) automatically as soon as the operation is complete. The drive can only be reinitialized when locked. **CAUTION** Make sure that the cause of the fault that led to the drive locking has been removed before reinitializing. **Failure to follow this instruction can result in equipment damage.**		
rPA	**[Product reset assig.]**		[No] (nO)
	Parameter can only be modified in [ACCESS LEVEL] = [Expert] mode. Drive reinitialization via logic input. Can be used to reset all faults without having to disconnect the drive from the power supply. The drive is reinitialized on a rising edge (change from 0 to 1) of the assigned input. The drive can only be reinitialized when locked. ☐ **[No]** (nO): Function inactive ☐ **[LI1]** (LI1) to **[LI6]** (LI6) ☐ **[LI7]** (LI7) to **[LI10]** (LI10): If VW3A3201 logic I/O card has been inserted ☐ **[LI11]** (LI11) to **[LI14]** (LI14): If VW3A3202 extended I/O card has been inserted To assign reinitialization, press and hold down the "ENT" key for 2 s. **CAUTION** Make sure that the cause of the fault that led to the drive locking has been removed before reinitializing. **Failure to follow this instruction can result in equipment damage.**		

Code	Name/Description	Adjustment range	Factory setting
Atr-	**[AUTOMATIC RESTART]**		
Atr	**[Automatic restart]**		[No] (nO)

- ☐ **[No]** (nO): Function inactive
- ☐ **[Yes]** (YES): Automatic restart, after locking on a fault, if the fault has disappeared and the other operating conditions permit the restart. The restart is performed by a series of automatic attempts separated by increasingly longer waiting periods: 1 s, 5 s, 10 s, then 1 mn for the following attempts. The drive fault relay remains activated if this function is active. The speed reference and the operating direction must be maintained.
  Use 2-wire control ([2/3 wire control] (tCC) = [2 wire] (2C) and [2 wire type] (tCt) = [Level] (LEL) see page 82).

⚠ WARNING

UNINTENDED EQUIPMENT OPERATION

Check that an automatic restart will not endanger personnel or equipment in any way.

Failure to follow these instructions can result in death or serious injury.

If the restart has not taken place once the configurable time tAr has elapsed, the procedure is aborted and the drive remains locked until it is turned off and then on again.
The faults which permit this function are listed on page 245:

tAr	**[Max. restart time]**		[5 minutes] (5)

- ☐ **[5 minutes]** (5): 5 minutes
- ☐ **[10 minutes]** (10): 10 minutes
- ☐ **[30 minutes]** (30): 30 minutes
- ☐ **[1 hour]** (1h): 1 hour
- ☐ **[2 hours]** (2h): 2 hours
- ☐ **[3 hours]** (3h): 3 hours
- ☐ **[Unlimited]** (Ct): Unlimited

Max. duration of restart attempts. This parameter appears if [Automatic restart] (Atr) = [Yes] (YES).
It can be used to limit the number of consecutive restarts on a recurrent fault.

Code	Name/Description	Adjustment range	Factory setting
FLr-	**[CATCH ON THE FLY]**		
FLr	**[Catch on the fly]** Used to enable a smooth restart if the run command is maintained after the following events: • Loss of line supply or disconnection • Reset of current fault or automatic restart • Freewheel stop The speed given by the drive resumes from the estimated speed of the motor at the time of the restart, then follows the ramp to the reference speed. This function requires 2-wire level control. nO ☐ **[No]** (nO): Function inactive YES ☐ **[Yes]** (YES): Function active When the function is operational, it activates at each run command, resulting in a slight delay of the current (0.5 s max.). [Catch on the fly] (FLr) is forced to [No] (nO) if [Auto DC injection] (AdC) page 137 = [Continuous] (Ct) ☞ **Note :** This function should not be used with motors in parallel because the speed estimation based on motor current measurement is not possible.		[Yes] (YES)
UCb	**[Sensitivity]** Parameter accessible at and above ATV61HD55M3X, ATV61HD90N4 and ATV61HC11Y. Adjusts the catch-on-the-fly sensitivity around the zero speed. Decrease the value if the drive is not able to perform the catch on the fly, and increase it if the drive locks on a fault as it performs the catch on the fly.	0.1 to 15%	0.6%

Parameter that can be modified during operation or when stopped.

Motor thermal protection

Function:

Thermal protection by calculating the I^2t.

Note: The memory of the motor thermal state is saved when the drive is switched off. The power-off time is used to recalculate the thermal state the next time the drive is switched on.

- Naturally-cooled motors:
  The tripping curves depend on the motor frequency.
- Force-cooled motors:
  Only the 50 Hz tripping curve needs to be considered, regardless of the motor frequency.

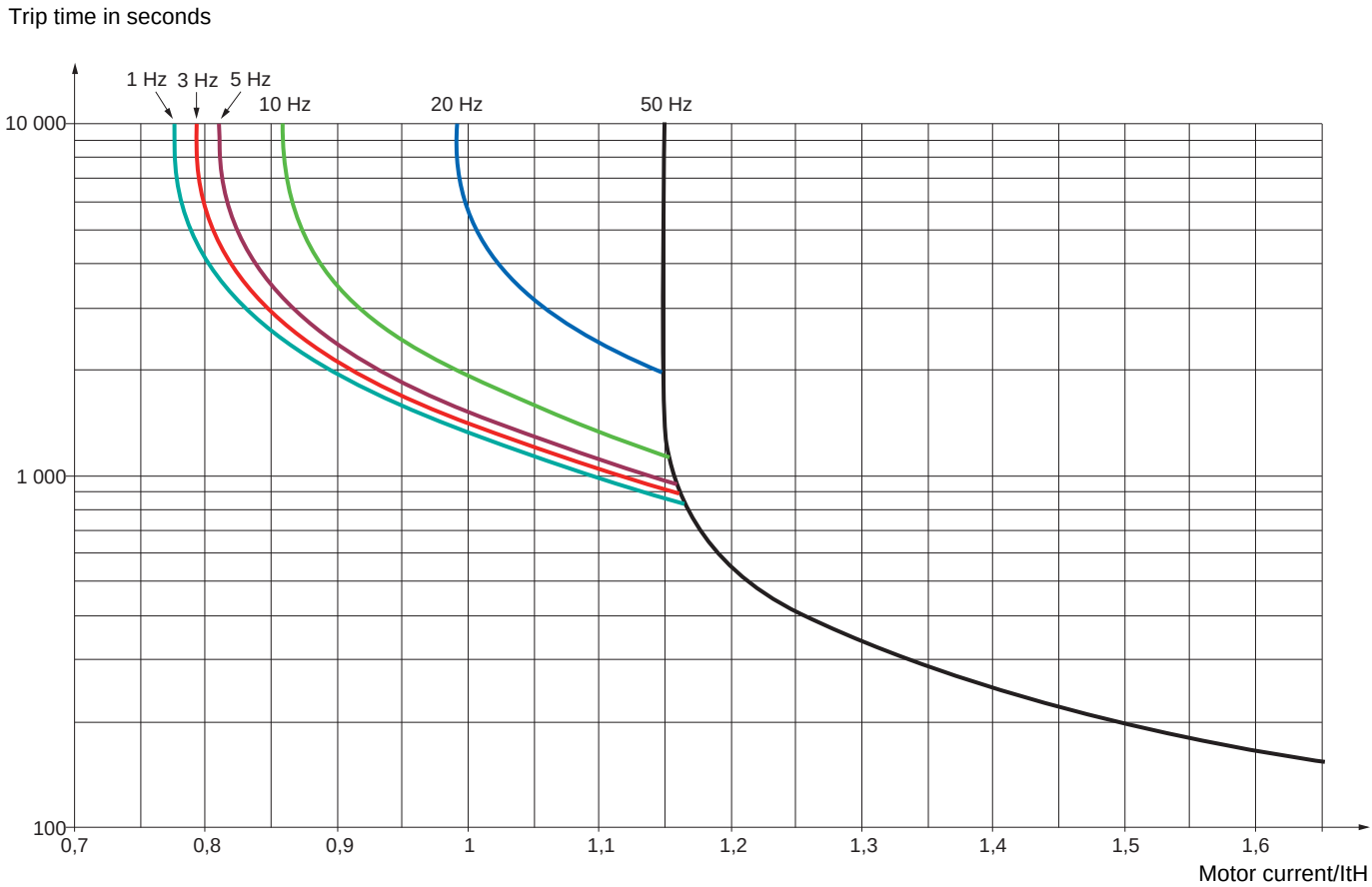

Code	Name/Description	Adjustment range	Factory setting
tHt-	**[MOTOR THERMAL PROT.]**		
tHt nO ACL FCL	**[Motor protect. type]** ☐ **[No]** (nO): No protection. ☐ **[Self cooled]** (ACL): For self-cooled motors ☐ **[Force-cool]** (FCL): For force-cooled motors **Note:** A fault trip will occur when the thermal state reaches 118% of the rated state and reactivation will occur when the state falls back below 100%.		[Self cooled] (ACL)
ttd ()	**[Motor therm. level]** (1) Trip threshold for motor thermal alarm (logic output or relay)	0 to 118%	100%
ttd2 ()	**[Motor2 therm. level]** Trip threshold for motor 2 thermal alarm (logic output or relay)	0 to 118%	100%
ttd3 ()	**[Motor3 therm. level]** Trip threshold for motor 3 thermal alarm (logic output or relay)	0 to 118%	100%
OLL nO YES Stt LFF rLS rMP FSt dCI	**[Overload fault mgt]** Type of stop in the event of a motor thermal fault ☐ **[Ignore]** (nO): Fault ignored ☐ **[Freewheel]** (YES): Freewheel stop. ☐ **[Per STT]** (Stt): Stop according to configuration of [Type of stop] (Stt) page 135, without fault tripping. In this case the fault relay does not open and the drive is ready to restart as soon as the fault disappears, according to the restart conditions of the active command channel (e.g., according to [2/3 wire control] (tCC) and [2 wire type] (tCt) page 82 if control is via the terminals). Configuring an alarm for this fault is recommended (assigned to a logic output, for example) in order to indicate the cause of the stop. ☐ **[fallback spd]** (LFF): Switch to fallback speed, maintained as long as the fault is present and the run command is not disabled (2). ☐ **[Spd maint.]** (rLS): The drive maintains the speed being applied when the fault occurred, as long as the fault is present and the run command is not disabled (2). ☐ **[Ramp stop]** (rMP): Stop on ramp ☐ **[Fast stop]** (FSt): Fast stop ☐ **[DC injection]** (dCI): DC injection stop. This type of stop cannot be used with certain other functions. See table on page 124.		[Freewheel] (YES)
OPL-	**[OUTPUT PHASE LOSS]**		
OPL nO YES OAC	**[Output Phase Loss]** ☐ **[No]** (nO): Function inactive ☐ **[Yes]** (YES): Tripping on OPF fault with freewheel stop. ☐ **[Output cut]** (OAC): No fault triggered, but management of the output voltage in order to avoid an overcurrent when the link with the motor is re-established and catch on the fly performed (even if this function has not been configured).		[Yes] (YES)
Odt ()	**[OutPh time detect]** Time delay for taking the [Output Phase Loss] (OPL) fault into account, or for taking management of the output voltage into account if [Output Phase Loss] (OPL) = [Ouptut cut] (OAC).	0.5 to 10 s	0.5 s

(1) The parameter can also be accessed in the [1.3 SETTINGS] (SEt-) menu.
(2) Because, in this case, the fault does not trigger a stop, it is essential to assign a relay or logic output to its indication.

() Parameter that can be modified during operation or when stopped.

IPL-	**[INPUT PHASE LOSS]**	
IPL	**[Input phase loss]** nO **[Ignore]** (nO): Fault ignored, to be used when the drive is supplied via a single-phase supply or by the DC bus. YES **[Freewheel]** (YES): Fault, with freewheel stop. If one phase disappears, the drive switches to fault mode [Input phase loss] (IPL), but if 2 or 3 phases disappear, the drive continues to operate until it trips on an undervoltage fault.	According to drive rating
OHL-	**[DRIVE OVERHEAT]**	
OHL	**[Overtemp fault mgt]** **CAUTION** **RISK OF EQUIPMENT DAMAGE** Inhibiting faults results in the drive not being protected. This invalidates the warranty. Check that the possible consequences do not present any risk. **Failure to follow these instructions can result in equipment damage.** Behavior in the event of the drive overheating nO **[Ignore]** (nO): Fault ignored YES **[Freewheel]** (YES): Freewheel stop. Stt **[Per STT]** (Stt): Stop according to configuration of [Type of stop] (Stt) page 135, without fault tripping. In this case the fault relay does not open and the drive is ready to restart as soon as the fault disappears, according to the restart conditions of the active command channel (e.g., according to [2/3 wire control] (tCC) and [2 wire type] (tCt) page 82 if control is via the terminals). Configuring an alarm for this fault is recommended (assigned to a logic output, for example) in order to indicate the cause of the stop. LFF **[fallback spd]** (LFF): Switch to fallback speed, maintained as long as the fault is present and the run command is not disabled (1). rLS **[Spd maint.]** (rLS): The drive maintains the speed being applied when the fault occurred, as long as the fault is present and the run command is not disabled (1). rMP **[Ramp stop]** (rMP): Stop on ramp FSt **[Fast stop]** (FSt): Fast stop dCI **[DC injection]** (dCI): DC injection stop. This type of stop cannot be used with certain other functions. See table on page 124. **Note:** A fault trip will occur when the thermal state reaches 118% of the rated state and reactivation will occur when the state falls back below 90%.	[Freewheel] (YES)
tHA	**[Drv therm. state al]** Trip threshold for drive thermal alarm (logic output or relay).	0 to 118% 100%

(1) Because, in this case, the fault does not trigger a stop, it is essential to assign a relay or logic output to its indication.

Parameter that can be modified during operation or when stopped.

Deferred stop on thermal alarm

This function can be used in intermittent applications, where it is desirable to avoid any stops for which no command has been given.
It prevents untimely stopping if the drive or motor overheats, by authorizing operation until the next stop for which a command is given.
At the next stop, the drive is locked until the thermal state falls back to a value which undershoots the set threshold by 20%. Example: A trip threshold set at 80% enables reactivation at 60%.
One thermal state threshold must be defined for the drive, and one thermal state threshold for the motor(s), which will trip the deferred stop.

Code	Name/Description	Adjustment range	Factory setting
SAt -	**[THERMAL ALARM STOP]**		
SAt nO YES	**[Thermal alarm stop]** **[No]** (nO): Function inactive (in this case, the following parameters cannot be accessed) **[Yes]** (YES): Freewheel stop on drive or motor thermal alarm **CAUTION** **The drive and motor are no longer protected in the event of thermal alarm stops. This invalidates the warranty.** **Check that the possible consequences do not present any risk.** **Failure to follow these instructions can result in equipment damage.**		[No] (nO)
tHA	**[Drv therm. state al]** Thermal state threshold of the drive tripping the deferred stop.	0 to 118%	100%
ttd	**[Motor therm. level]** Thermal state threshold of the motor tripping the deferred stop.	0 to 118%	100%
ttd2	**[Motor2 therm. level]** Thermal state threshold of the motor 2 tripping the deferred stop.	0 to 118%	100%
ttd3	**[Motor3 therm. level]** Thermal state threshold of the motor 3 tripping the deferred stop.	0 to 118%	100%

Parameter that can be modified during operation or when stopped.

Code	Name/Description	Adjustment range	Factory setting
EtF-	**[EXTERNAL FAULT]**		
EtF	**[External fault ass.]**		[No] (nO)
nO	☐ **[No]** (nO): Function inactive		
LI1	☐ **[LI1]** (LI1)		
-	:		
-	:		
-	☐ **[...]** (...): See the assignment conditions on page 118. If the assigned bit is at 0, there is no external fault. If the assigned bit is at 1, there is an external fault. Logic can be configured via [External fault config] (LEt) if a logic input has been assigned.		
LEt	**[External fault config]**		[Active high] (HIG)
	Parameter can be accessed if the external fault has been assigned to a logic input. It defines the positive or negative logic of the input assigned to the fault.		
LO	☐ **[Active low]** (LO): Fault on falling edge (change from 1 to 0) of the assigned input		
HIG	☐ **[Active high]** (HIG): Fault on rising edge (change from 0 to 1) of the assigned input		
EPL	**[External fault mgt]**		[Freewheel] (YES)
	Type of stop in the event of an external fault		
nO	☐ **[Ignore]** (nO): Fault ignored		
YES	☐ **[Freewheel]** (YES): Freewheel stop.		
Stt	☐ **[Per STT]** (Stt): Stop according to configuration of [Type of stop] (Stt) page 135, without fault tripping. In this case the fault relay does not open and the drive is ready to restart as soon as the fault disappears, according to the restart conditions of the active command channel (e.g., according to [2/3 wire control] (tCC) and [2 wire type] (tCt) page 82 if control is via the terminals). Configuring an alarm for this fault is recommended (assigned to a logic output, for example) in order to indicate the cause of the stop.		
LFF	☐ **[fallback spd]** (LFF): Switch to fallback speed, maintained as long as the fault is present and the run command is not disabled (1).		
rLS	☐ **[Spd maint.]** (rLS): The drive maintains the speed being applied when the fault occurred, as long as the fault is present and the run command is not disabled (1).		
rMP	☐ **[Ramp stop]** (rMP): Stop on ramp		
FSt	☐ **[Fast stop]** (FSt): Fast stop		
dCI	☐ **[DC injection]** (dCI): DC injection stop. This type of stop cannot be used with certain other functions. See table on page 124.		

(1) Because, in this case, the fault does not trigger a stop, it is essential to assign a relay or logic output to its indication.

Code	Name/Description	Adjustment range	Factory setting
USb-	**[UNDERVOLTAGE MGT]**		
USb	**[UnderV. fault mgt]** Behavior of the drive in the event of an undervoltage 0 ☐ **[Flt&R1open]** (0): Fault and fault relay open. 1 ☐ **[Flt&R1close]** (1): Fault and fault relay closed. 2 ☐ **[Alarm]** (2): Alarm and fault relay remains closed. The alarm may be assigned to a logic output or a relay.		[Flt&R1open] (0)
UrES	**[Mains voltage]** Rated voltage of the line supply in V. For ATV61●●●M3: 200 ☐ **[200Vac]** (200): 200 Volts AC 220 ☐ **[220Vac]** (220): 220 Volts AC 240 ☐ **[240Vac]** (240): 240 Volts AC 260 ☐ **[260Vac]** (260): 260 Volts AC (factory setting) For ATV61●●●N4: 380 ☐ **[380Vac]** (380): 380 Volts AC 400 ☐ **[400Vac]** (400): 400 Volts AC 440 ☐ **[440Vac]** (440): 440 Volts AC 460 ☐ **[460Vac]** (460): 460 Volts AC 480 ☐ **[480Vac]** (480): 480 Volts AC (factory setting) For ATV61●●●S6X: 500 ☐ **[500 Vac]** (500): 500 Volts AC 600 ☐ **[600 Vac]** (600): 600 Volts AC (factory setting) For ATV61●●●Y: 500 ☐ **[500 Vac]** (500): 500 Volts AC 600 ☐ **[600 Vac]** (600): 600 Volts AC 690 ☐ **[690 Vac]** (690): 690 Volts AC (factory setting)	According to drive voltage rating	According to drive voltage rating
USL	**[Undervoltage level]** Undervoltage fault trip level setting in V. The adjustment range and factory setting are determined by the drive voltage rating and the [Mains voltage] (UrES) value.		
USt	**[Undervolt. time out]** Time delay for taking undervoltage fault into account	0.2 s to 999.9 s	0.2 s
StP	**[UnderV. prevention]** Behavior in the event of the undervoltage fault prevention level being reached nO ☐ **[No]** (nO): No action MMS ☐ **[DC Maintain]** (MMS): This stop mode uses the inertia to maintain the DC bus voltage as long as possible. rMP ☐ **[Ramp stop]** (rMP): Stop following an adjustable ramp [Max stop time] (StM). LnF ☐ **[Lock-out]** (LnF): Lock (freewheel stop) without fault		[No] (nO)

Parameter that can be modified during operation or when stopped.

Code	Name/Description	Adjustment range	Factory setting
USb-	**[UNDERVOLTAGE MGT]**		
tSM	**[UnderV. restart tm]**	1.0 s to 999.9 s	1.0 s
	Time delay before authorizing the restart after a complete stop for [UnderV. prevention] (StP) = [Ramp stop] (rMP), if the voltage has returned to normal.		
UPL	**[Prevention level]**		
	Undervoltage fault prevention level setting in V, which can be accessed if [UnderV. prevention] (StP) is not [No] (nO). The adjustment range and factory setting are determined by the drive voltage rating and the [Mains voltage] (UrES) value.		
StM	**[Max stop time]**	0.01 to 60.00 s	1.00 s
	Ramp time if [UnderV. prevention] (StP) = [Ramp stop] (rMP).		
tbS	**[DC bus maintain tm]**	1 to 9,999 s	9,999 s
	DC bus maintain time if [UnderV. prevention] (StP) = [DC Maintain] (MMS).		
tIt-	**[IGBT TESTS]**		
Strt	**[IGBT test]**		[Yes] (YES)
nO YES	☐ **[No]** (nO): No test ☐ **[Yes]** (YES): The IGBTs are tested on power up and every time a run command is sent. These tests cause a slight delay (a few ms). In the event of a fault, the drive will lock. The following faults can be detected: - Drive output short-circuit (terminals U-V-W): SCF display - IGBT faulty: xtF, where x indicates the number of the IGBT concerned - IGBT short-circuited: x2F, where x indicates the number of the IGBT concerned		

Parameter that can be modified during operation or when stopped.

Code	Name/Description	Adjustment range	Factory setting
LFL-	**[4-20mA LOSS]**		
LFL2	**[AI2 4-20mA loss]**		[Ignore] (nO)
nO	☐ **[Ignore]** (nO): Fault ignored. This configuration is the only one possible if [AI2 min. value] (CrL2) page 88 is not greater than 3 mA or if [AI2 Type] (AI2t) page 88 = [Voltage] (10U).		
YES	☐ **[Freewheel]** (YES): Freewheel stop.		
Stt	☐ **[Per STT]** (Stt): Stop according to configuration of [Type of stop] (Stt) page 135, without fault tripping. In this case the fault relay does not open and the drive is ready to restart as soon as the fault disappears, according to the restart conditions of the active command channel (e.g., according to [2/3 wire control] (tCC) and [2 wire type] (tCt) page 82 if control is via the terminals). Configuring an alarm for this fault is recommended (assigned to a logic output, for example) in order to indicate the cause of the stop.		
LFF	☐ **[fallback spd]** (LFF): Switch to fallback speed, maintained as long as the fault is present and the run command is not disabled (1).		
rLS	☐ **[Spd maint.]** (rLS): The drive maintains the speed being applied when the fault occurred, as long as the fault is present and the run command is not disabled (1).		
rMP	☐ **[Ramp stop]** (rMP): Stop on ramp		
FSt	☐ **[Fast stop]** (FSt): Fast stop		
dCI	☐ **[DC injection]** (dCI): DC injection stop. This type of stop cannot be used with certain other functions. See table on page 124.		
LFL3	**[AI3 4-20mA loss]** Can be accessed if a VW3A3202 option card has been inserted.		[Ignore] (nO)
nO	☐ **[Ignore]** (nO): Fault ignored. This configuration is the only one possible if [AI3 min. value] (CrL3) page 89 is not greater than 3 mA.		
YES	☐ **[Freewheel]** (YES): Freewheel stop.		
Stt	☐ **[Per STT]** (Stt): Stop according to configuration of [Type of stop] (Stt) page 135, without fault tripping. In this case the fault relay does not open and the drive is ready to restart as soon as the fault disappears, according to the restart conditions of the active command channel (e.g., according to [2/3 wire control] (tCC) and [2 wire type] (tCt) page 82 if control is via the terminals). Configuring an alarm for this fault is recommended (assigned to a logic output, for example) in order to indicate the cause of the stop.		
LFF	☐ **[fallback spd]** (LFF): Switch to fallback speed, maintained as long as the fault is present and the run command is not disabled (1).		
rLS	☐ **[Spd maint.]** (rLS): The drive maintains the speed being applied when the fault occurred, as long as the fault is present and the run command is not disabled (1).		
rMP	☐ **[Ramp stop]** (rMP): Stop on ramp		
FSt	☐ **[Fast stop]** (FSt): Fast stop		
dCI	☐ **[DC injection]** (dCI): DC injection stop. This type of stop cannot be used with certain other functions. See table on page 124.		
LFL4	**[AI4 4-20mA loss]** Can be accessed if a VW3A3202 option card has been inserted.		[Ignore] (nO)
nO	☐ **[Ignore]** (nO): Fault ignored. This configuration is the only one possible if [AI4 min. value] (CrL4) page 90 is not greater than 3 mA or if [AI4 Type] (AI4t) page 90 = [Voltage] (10U).		
YES	☐ **[Freewheel]** (YES): Freewheel stop.		
Stt	☐ **[Per STT]** (Stt): Stop according to configuration of [Type of stop] (Stt) page 135, without fault tripping. In this case the fault relay does not open and the drive is ready to restart as soon as the fault disappears, according to the restart conditions of the active command channel (e.g., according to [2/3 wire control] (tCC) and [2 wire type] (tCt) page 82 if control is via the terminals). Configuring an alarm for this fault is recommended (assigned to a logic output, for example) in order to indicate the cause of the stop.		
LFF	☐ **[fallback spd]** (LFF): Switch to fallback speed, maintained as long as the fault is present and the run command is not disabled (1).		
rLS	☐ **[Spd maint.]** (rLS): The drive maintains the speed being applied when the fault occurred, as long as the fault is present and the run command is not disabled (1).		
rMP	☐ **[Ramp stop]** (rMP): Stop on ramp		
FSt	☐ **[Fast stop]** (FSt): Fast stop		
dCI	☐ **[DC injection]** (dCI): DC injection stop. This type of stop cannot be used with certain other functions. See table on page 124.		

(1) Because, in this case, the fault does not trigger a stop, it is essential to assign a relay or logic output to its indication.

Parameter can be accessed in [Expert] mode.

Code	Name/Description	Adjustment range	Factory setting
InH-	**[FAULT INHIBITION]**		
InH	**[Fault inhibit assign.]**		[No] (nO)

To assign fault inhibit, press the “ENT” key for 2 s.

CAUTION

Inhibiting faults results in the drive not being protected. This invalidates the warranty.
Check that the possible consequences do not present any risk.
Failure to follow these instructions can result in equipment damage.

nO
LI1
-
-
-

- **[No]** (nO): Function inactive, thereby preventing access to other function parameters.
- **[LI1]** (LI1)
  :
  :
- **[...]** (...): See the assignment conditions on page 118.

If the assigned input or bit is at 0, fault monitoring is active. If the assigned input or bit is at 1, fault monitoring is inactive. Active faults are reset on a rising edge (change from 0 to 1) of the assigned input or bit.

Note: The “Power Removal” function and any faults that prevent any form of operation are not affected by this function.
A list of faults affected by this function appears on pages 242 to 247.

InHS — **[Forced Run]** — [No] (nO)

This parameter causes the run command to be forced in a specific direction when the input or bit for fault inhibition is at 1, with priority over all other commands with the exception of “Power Removal”.
To assign forced run, press and hold down the “ENT” key for 2 s.

nO
Frd
rrS

- **[No]** (nO): Function inactive
- **[Fw.For.Run]** (Frd): Forced forward run.
- **[Rev.For.Run]** (rrS): Forced reverse run.

⚠ DANGER

UNINTENDED EQUIPMENT OPERATION

- Check that it is safe to force the run command.

Failure to follow these instructions will result in death or serious injury.

InHr — **[Forced Run Ref.]** — 0 to 500 or 599 Hz according to rating — 50 Hz

The parameter can be accessed if [Forced Run] (InHS) is not [No] (nO)
This parameter causes the reference to be forced to the configured value when the input or bit for fault inhibition is at 1, with priority over all other references. Value 0 = function inactive.
The factory setting changes to 60 Hz if [Standard mot. freq] (bFr) = [60 Hz NEMA] (60).

Code	Name/Description	Adjustment range	Factory setting
CLL-	**[COM. FAULT MANAGEMENT]**		
CLL	**[Network fault mgt]** Behavior of the drive in the event of a communication fault with a communication card nO ☐ **[Ignore]** (nO): Fault ignored YES ☐ **[Freewheel]** (YES): Freewheel stop. Stt ☐ **[Per STT]** (Stt): Stop according to configuration of [Type of stop] (Stt) page 135, without fault tripping. In this case the fault relay does not open and the drive is ready to restart as soon as the fault disappears, according to the restart conditions of the active command channel (e.g., according to [2/3 wire control] (tCC) and [2 wire type] (tCt) page 82 if control is via the terminals). LFF ☐ **[fallback spd]** (LFF): Switch to fallback speed, maintained as long as the fault is present and the run command is not disabled (1). rLS ☐ **[Spd maint.]** (rLS): The drive maintains the speed being applied when the fault occurred, as long as the fault is present and the run command is not disabled (1). rMP ☐ **[Ramp stop]** (rMP): Stop on ramp FSt ☐ **[Fast stop]** (FSt): Fast stop dCI ☐ **[DC injection]** (dCI): DC injection stop. This type of stop cannot be used with certain other functions. See table on page 124.		[Freewheel] (YES)
COL	**[CANopen fault mgt]** Behavior of the drive in the event of a communication fault with integrated CANopen nO ☐ **[Ignore]** (nO): Fault ignored YES ☐ **[Freewheel]** (YES): Freewheel stop. Stt ☐ **[Per STT]** (Stt): Stop according to configuration of [Type of stop] (Stt) page 135, without fault tripping. In this case the fault relay does not open and the drive is ready to restart as soon as the fault disappears, according to the restart conditions of the active command channel (e.g., according to [2/3 wire control] (tCC) and [2 wire type] (tCt) page 82 if control is via the terminals). LFF ☐ **[fallback spd]** (LFF): Switch to fallback speed, maintained as long as the fault is present and the run command is not disabled (1). rLS ☐ **[Spd maint.]** (rLS): The drive maintains the speed being applied when the fault occurred, as long as the fault is present and the run command is not disabled (1). rMP ☐ **[Ramp stop]** (rMP): Stop on ramp FSt ☐ **[Fast stop]** (FSt): Fast stop dCI ☐ **[DC injection]** (dCI): DC injection stop. This type of stop cannot be used with certain other functions. See table on page 124.		[Freewheel] (YES)
SLL	**[Modbus fault mgt]** Behavior of the drive in the event of a communication fault with integrated Modbus nO ☐ **[Ignore]** (nO): Fault ignored YES ☐ **[Freewheel]** (YES): Freewheel stop. Stt ☐ **[Per STT]** (Stt): Stop according to configuration of [Type of stop] (Stt) page 135, without fault tripping. In this case the fault relay does not open and the drive is ready to restart as soon as the fault disappears, according to the restart conditions of the active command channel (e.g., according to [2/3 wire control] (tCC) and [2 wire type] (tCt) page 82 if control is via the terminals). LFF ☐ **[fallback spd]** (LFF): Switch to fallback speed, maintained as long as the fault is present and the run command is not disabled (1). rLS ☐ **[Spd maint.]** (rLS): The drive maintains the speed being applied when the fault occurred, as long as the fault is present and the run command is not disabled (1). rMP ☐ **[Ramp stop]** (rMP): Stop on ramp FSt ☐ **[Fast stop]** (FSt): Fast stop dCI ☐ **[DC injection]** (dCI): DC injection stop. This type of stop cannot be used with certain other functions. See table on page 124.		[Freewheel] (YES)

(1) Because, in this case, the fault does not trigger a stop, it is essential to assign a relay or logic output to its indication.

Code	Name/Description	Adjustment range	Factory setting
tId-	**[TORQUE OR I LIM. DETECT.]**		
SSb	**[Trq/I limit. Stop]** Behavior in the event of switching to torque or current limitation nO ☐ **[Ignore]** (nO): Fault ignored YES ☐ **[Freewheel]** (YES): Freewheel stop. Stt ☐ **[Per STT]** (Stt): Stop according to configuration of [Type of stop] (Stt) page 135, without fault tripping. In this case the fault relay does not open and the drive is ready to restart as soon as the fault disappears, according to the restart conditions of the active command channel (e.g., according to [2/3 wire control] (tCC) and [2 wire type] (tCt) page 82 if control is via the terminals). Configuring an alarm for this fault is recommended (assigned to a logic output, for example) in order to indicate the cause of the stop. LFF ☐ **[fallback spd]** (LFF): Switch to fallback speed, maintained as long as the fault is present and the run command is not disabled (1). rLS ☐ **[Spd maint.]** (rLS): The drive maintains the speed being applied when the fault occurred, as long as the fault is present and the run command is not disabled (1). rMP ☐ **[Ramp stop]** (rMP): Stop on ramp FSt ☐ **[Fast stop]** (FSt): Fast stop dCI ☐ **[DC injection]** (dCI): DC injection stop. This type of stop cannot be used with certain other functions. See table on page 124.		[Ignore] (nO)
StO	**[Trq/I limit. time out]** (If fault has been configured) Time delay for taking SSF “Limitation” fault into account	0 to 9,999 ms	1,000 ms

(1) Because, in this case, the fault does not trigger a stop, it is essential to assign a relay or logic output to its indication.

Parameter that can be modified during operation or when stopped.

Use of the "Pulse input" to measure the speed of rotation of the motor

This function uses the "Pulse input" from the VW3A3202 extension card and can, therefore, only be used if this card has been inserted and if the "Pulse input" is not being used for another function.

Example of use

A notched disc driven by the motor and connected to a proximity sensor can be used to generate a frequency signal that is proportional to the speed of rotation of the motor.

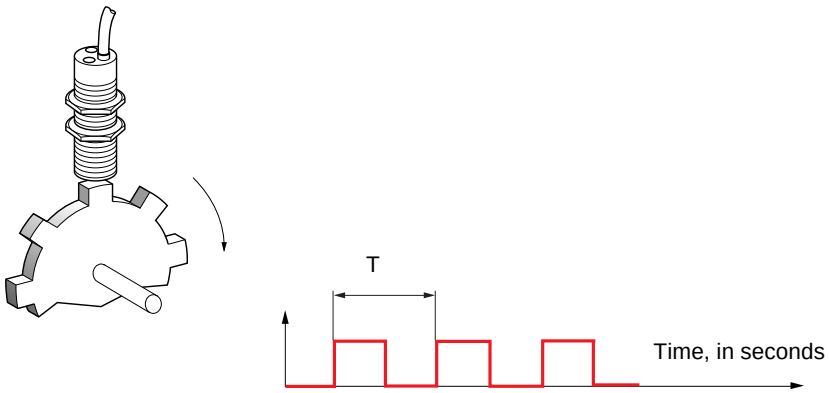

When applied to the "Pulse input", this signal supports:

- Measurement and display of the motor speed: signal frequency = 1/T. This frequency is displayed by means of the [Pulse in. work. freq.] (FqS) parameter, page 45 or 47.
- Overspeed detection (if the measured speed exceeds a preset threshold, the drive will trip on a fault).
- Detection of a speed threshold that can be adjusted using [Pulse warning thd.] (FqL) page 60 and is assignable to a relay or logic output, see page 96.

Code	Name/Description	Adjustment range	Factory setting
FqF-	**[FREQUENCY METER]** Can be accessed if a VW3A3202 option card has been inserted		
FqF nO YES	**[Frequency meter]** Activation of the speed measurement function. ☐ **[No]** (nO): Function inactive ☐ **[Yes]** (YES): Function active, assignment only possible if no other functions have been assigned to the "Pulse input".		[No] (nO)
FqC	**[Pulse scal. divisor]** Scaling factor for the "Pulse input" (divisor). The frequency measured is displayed by means of the [Pulse in. work. freq.] (FqS) parameter, page 45 or 47.	1.0 to 100.0	1.0
FqA nO -	**[Overspd. pulse thd.]** Activation and adjustment of overspeed monitoring: [Overspeed] (SOF) fault. ☐ **[No]** (nO): No overspeed monitoring ☐ **1 Hz to 30.00 kHz**: Adjustment of the frequency tripping threshold on the "Pulse input" divided by [Pulse scal. divisor] (FqC)		[No] (nO)
tdS	**[Pulse overspd delay]** Time delay for taking overspeed fault into account	0.0 s to 10.0 s	0.0 s
Fdt nO -	**[Level fr. pulse ctrl]** Activation and adjustment of monitoring for the Pulse input (speed feedback): [Speed fdback loss] (SPF) fault ☐ **[No]** (nO): No monitoring of speed feedback ☐ **0.1 Hz to 500.0 Hz**: Adjustment of the motor frequency threshold for tripping a speed feedback fault (difference between the estimated frequency and the measured speed)		[No] (nO)

Code	Name/Description	Adjustment range	Factory setting
brP-	**[DB RES. PROTECTION]**		
brO nO YES FLt	**[DB res. protection]** ☐ **[No]** (nO): No braking resistor protection (thereby preventing access to the other function parameters). ☐ **[Alarm]** (YES): Alarm. The alarm may be assigned to a logic output or a relay (see page 96). ☐ **[Fault]** (FLt) : Switch to fault (bOF) with locking of drive (freewheel stop). ☞ **Note:** The thermal state of the resistor can be displayed on the graphic display terminal. It is calculated for as long as the drive control remains connected to the power supply.		[No] (nO)
brP ( )	**[DB Resistor Power]** The parameter can be accessed if [DB res. protection] (brO) is not [No] (nO). Rated power of the resistor used.	0.1 kW (0.13 HP) to 1,000 kW (1,333 HP)	0.1 kW (0.13 HP)
brU ( )	**[DB Resistor value]** The parameter can be accessed if [DB res. protection] (brO) is not [No] (nO). Rated value of the braking resistor in Ohms.	0.1 to 200 Ohms	0.1 Ohm
bUF-	**[BU PROTECTION]** Parameter accessible at and above ATV61HD55M3X, ATV61HD90N4 and ATV61HC11Y.		
bUb nO YES	**[Brake res. fault Mgt]** Management of short-circuit [DB unit sh. circuit] (bUF) and overheating [Internal- th. sensor] (InFb) faults in the braking unit. ☐ **[Ignore]** (nO): Fault ignored. **Configuration to be used if there is no braking unit or resistor connected to the drive.** ☐ **[Freewheel]** (YES): Freewheel stop		[Freewheel] (YES)
tnF-	**[AUTO TUNING FAULT]**		
tnL nO YES	**[Autotune fault mgt]** ☐ **[Ignore]** (nO): Fault ignored. ☐ **[Freewheel]** (YES): Freewheel stop.		[Freewheel] (YES)

( ) Parameter that can be modified during operation or when stopped.

Card pairing

Function can only be accessed in [Expert] mode.

This function is used to detect whenever a card has been replaced or the software has been modified in any way.

When a pairing password is entered, the parameters of the cards currently inserted are stored. On every subsequent power-up these parameters are verified and in the event of a discrepancy the drive locks in HCF fault mode. Before the drive can be restarted you must revert to the original situation or re-enter the pairing password.

The following parameters are verified:

- The type of card for: all cards
- The software version for: the two control cards, the VW3A3202 extension card, the Controller Inside card and the communication cards
- The serial number for: both control cards

Code	Name/Description	Adjustment range	Factory setting
PPI-	■ [CARDS PAIRING]		
PPI	❑ [Pairing password]	OFF to 9,999	[OFF] (OFF)
	The [OFF] (OFF) value signifies that the card pairing function is inactive. The [ON] (On) value signifies that card pairing is active and that an access code must be entered in order to start the drive in the event of a card pairing fault. As soon as the code has been entered the drive is unlocked and the code changes to [ON] (On). - The PPI code is an unlock code known only to Schneider Electric Product Support.		

Process underload fault

A process underload is detected when the next event occurs and remains pending for a minimum time (ULt), which is configurable:

- The motor is in steady state and the torque is below the set underload limit (LUL, LUn, rMUd parameters).

The motor is in steady state when the offset between the frequency reference and motor frequency falls below the configurable threshold (Srb).

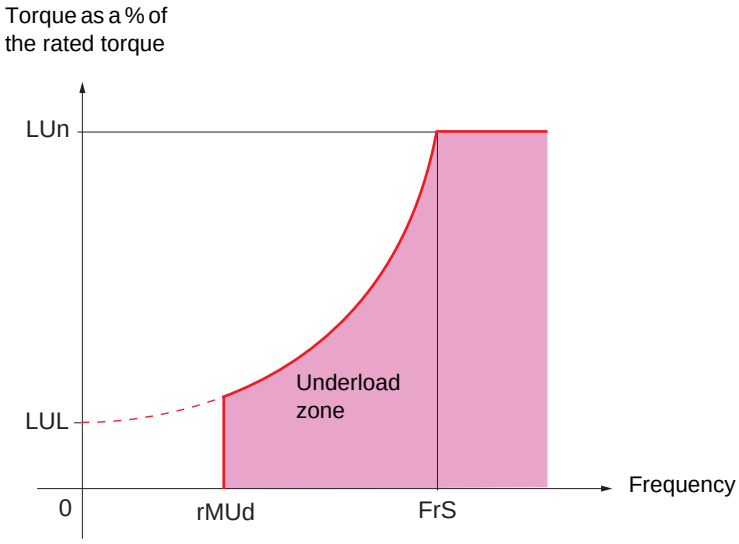

.

Between zero frequency and the rated frequency, the curve reflects the following equation:

$$\text{torque} = \text{LUL} + \frac{(\text{LUn} - \text{LUL}) \times (\text{frequency})^2}{(\text{rated frequency})^2}$$

The underload function is not active for frequencies below rMUd.

A relay or a logic output can be assigned to the signaling of this fault in the [1.5 INPUTS / OUTPUTS CFG] (I-O-) menu.

Code	Name/Description	Adjustment range	Factory setting
ULd-	**[PROCESS UNDERLOAD]**		
ULt	**[Unld T. Del. Detect]**	0 to 100 s	0 s
	Underload detection time delay. A value of 0 deactivates the function and renders the other parameters inaccessible.		
LUn	**[Unld.Thr.Nom.Speed]** (1)	20 to 100%	60%
	Underload threshold at rated motor frequency ([Rated motor freq.] (FrS) page 36), as a % of the rated motor torque.		
LUL	**[Unld.Thr.0.Speed]** (1)	0 to [Unld.Thr.Nom.Speed] (LUn)	0%
	Underload threshold at zero frequency, as a % of the rated motor torque.		
rNUd	**[Unld. Freq.Thr. Det.]** (1)	0 to 500 or 599 Hz according to rating	0 Hz
	Minimum frequency underload detection threshold		
Srb	**[Hysteresis Freq.Att.]** (1)	0.3 to 500 or 599 Hz according to rating	0.3 Hz
	Maximum deviation between the frequency reference and the motor frequency, which defines steady state operation.		
UdL	**[Underload Mangmt.]**		[Freewheel] (YES)
	Behavior on switching to underload detection. nO **[Ignore]** (nO): Fault ignored YES **[Freewheel]** (YES): Freewheel stop rMP **[Ramp stop]** (rMP): Stop on ramp FSt **[Fast stop]** (FSt): Fast stop		
FtU	**[Underload T.B.Rest.]** (1)	0 to 6 min	0 min
	This parameter cannot be accessed if [Underload Mangmt.] (UdL) = [Ignore] (nO). Minimum time permitted between an underload being detected and any automatic restart. In order for an automatic restart to be possible, the value of [Max. restart time] (tAr) page 193 must exceed that of this parameter by at least one minute.		

(1) The parameter can also be accessed in the [1.3 SETTINGS] (SEt-) menu.

Parameter that can be modified during operation or when stopped.

Process overload fault

A process overload is detected when the next event occurs and remains pending for a minimum time (tOL), which is configurable:

- The drive is in current limitation mode.
- The motor is in steady state and the current is above the set overload threshold (LOC).

The motor is in steady state when the offset between the frequency reference and motor frequency falls below the configurable threshold (Srb).

A relay or a logic output can be assigned to the signaling of this fault in the [1.5 INPUTS / OUTPUTS CFG] (I-O-) menu.

Code	Name/Description	Adjustment range	Factory setting
OLd-	■ [PROCESS OVERLOAD]		
tOL	❑ [Ovld Time Detect.] Overload detection time delay. A value of 0 deactivates the function and renders the other parameters inaccessible.	0 to 100 s	0 s
LOC ( )	❑ [Ovld Detection Thr.] (1) Overload detection threshold, as a % of the rated motor current [Rated mot. current] (nCr). This value must be less than the limit current in order for the function to work.	70 to 150%	110%
Srb ( )	❑ [Hysteresis Freq.Att.] (1) Maximum deviation between the frequency reference and the motor frequency, which defines steady state operation.	0.3 to 500 or 599 Hz according to rating	0.3 Hz
OdL	❑ [Ovld.Proces.Mngmt] Behavior on switching to overload detection. nO ☐ [Ignore] (nO): Fault ignored YES ☐ [Freewheel] (YES): Freewheel stop rMP ☐ [Ramp stop] (rMP): Stop on ramp FSt ☐ [Fast stop] (FSt): Fast stop		[Freewheel] (YES)
FtO ( )	❑ [Overload T.B.Rest.] (1) This parameter cannot be accessed if [Ovld.Proces.Mngmt] (OdL) = [Ignore] (nO). Minimum time permitted between an overload being detected and any automatic restart. In order for an automatic restart to be possible, the value of [Max. restart time] (tAr) page 193 must exceed that of this parameter by at least one minute.	0 to 6 min	0 min

(1) The parameter can also be accessed in the [1.3 SETTINGS] (SEt-) menu.

( ) Parameter that can be modified during operation or when stopped.

Code	Name/Description	Adjustment range	Factory setting
FdL-	**[DAMPER FAULT MGT.]**		
FdL	**[Damper fault mgt.]** Type of stop in the event of a damper fault: [Damper stuck] (Fd1) nO **[Ignore]** (nO): Fault ignored YES **[Freewheel]** (YES): Freewheel stop Stt **[Per STT]** (Stt): Stop according to configuration of [Type of stop] (Stt) page 135, without fault tripping. In this case the fault relay does not open and the drive is ready to restart as soon as the fault disappears, according to the restart conditions of the active command channel (e.g. according to [2/3 wire control] (tCC) and [2 wire type] (tCt) page 82 if control is via the terminals). It is advisable to configure an alarm for this fault (assigned to a logic output, for example) in order to indicate the cause of the stop. LFF **[fallback spd]** (LFF): Change to fallback speed, maintained as long as the fault persists and the run command has not been removed (1). rLS **[Spd maint.]** (rLS): The drive maintains the speed being applied when the fault occurred, as long as the fault is present and the run command has not been removed (1). rMP **[Ramp stop]** (rMP): Stop on ramp FSt **[Fast stop]** (FSt): Fast stop dCI **[DC injection]** (dCI): DC injection stop. This type of stop cannot be used with certain other functions. See table on page 124.		[Freewheel] (YES)

(1) Because, in this case, the fault does not trigger a stop, it is essential to assign a relay or logic output to its indication.

Code	Name/Description		Adjustment range	Factory setting
LFF-	**[FALLBACK SPEED]**			
LFF	❑ **[Fallback speed]** Selection of the fallback speed		0 to 500 or 599 Hz according to rating	0 Hz
FSt-	**[RAMP DIVIDER]**			
dCF	❑ **[Ramp divider]** The ramp that is enabled (dEC or dE2) is then divided by this coefficient when stop requests are sent. Value 0 corresponds to a minimum ramp time.	(1)	0 to 10	4
dCI-	**[DC INJECTION]**			
IdC	❑ **[DC inject. level 1]** Level of DC injection braking current activated via logic input or selected as stop mode. **CAUTION** Check that the motor will withstand this current without overheating. **Failure to follow these instructions can result in equipment damage.**	(1) (3)	0.1 to 1.1 or 1.2 In (2) according to rating	0.64 In (2)
tdI	❑ **[DC injection time 1]** Maximum current injection time [DC inject. level 1] (IdC). After this time the injection current becomes [DC inject. level 2] (IdC2).	(1) (3)	0.1 to 30 s	0.5 s
IdC2	❑ **[DC inject. level 2]** Injection current activated by logic input or selected as stop mode, once period of time [DC injection time 1] (tdI) has elapsed. **CAUTION** Check that the motor will withstand this current without overheating. **Failure to follow these instructions can result in equipment damage.**	(1) (3)	0.1 In (2) to [DC inject. level 1] (IdC)	0.5 In (2)
tdC	❑ **[DC injection time 2]** Maximum injection time [DC inject. level 2] (IdC2) for injection, selected as stop mode only. (Can be accessed if [Type of stop] (Stt) = [DC injection] (dCI)).	(1) (3)	0.1 to 30 s	0.5 s

(1) The parameter can also be accessed in the [1.3 SETTINGS] (SEt-) and [1.7 APPLICATION FUNCT.] (FUn-) menus.
(2) In corresponds to the rated drive current indicated in the Installation Manual and on the drive nameplate.
(3) Warning: These settings are independent of the [AUTO DC INJECTION] (AdC-) function.

Parameter that can be modified during operation or when stopped.

With graphic display terminal:

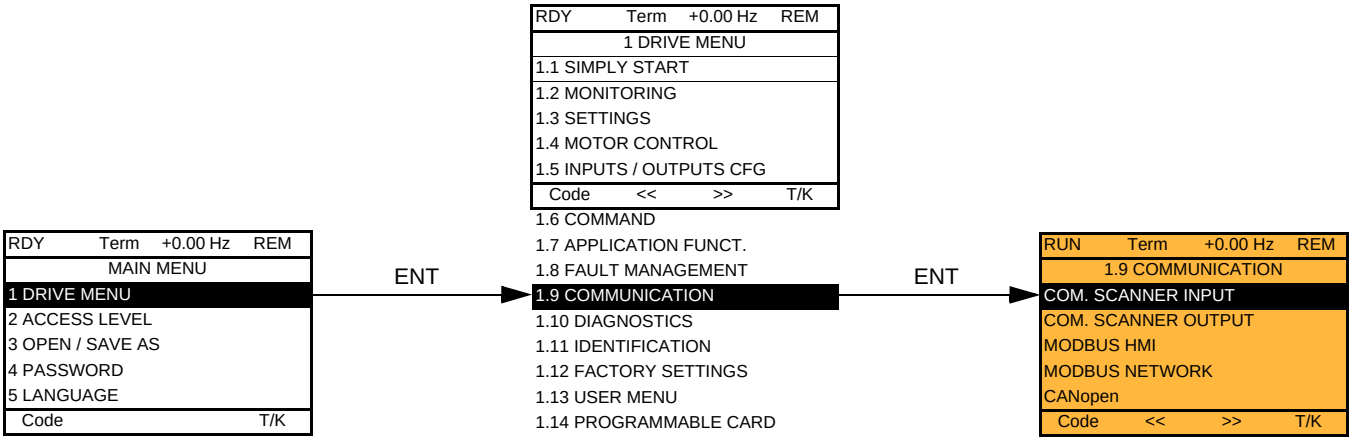

With integrated display terminal:

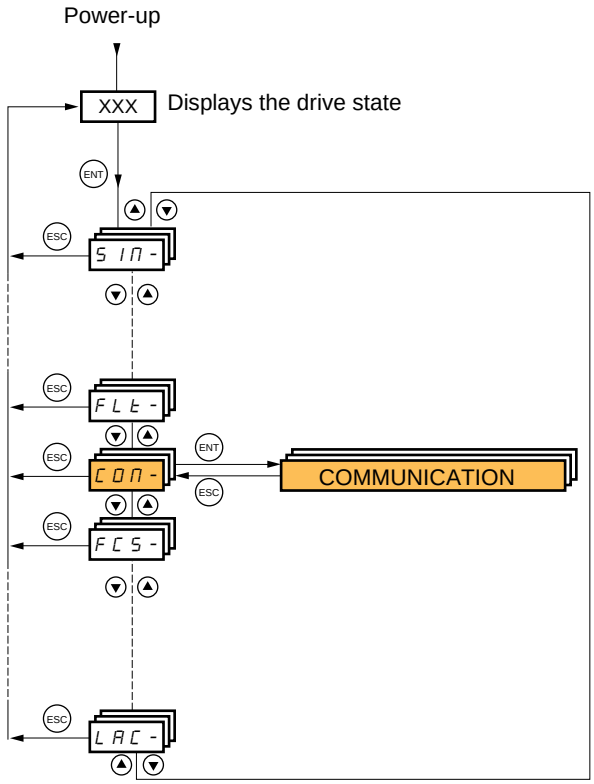

Code	Name/Description	Adjustment range	Factory setting
	[COM. SCANNER INPUT] Only accessible via graphic display terminal		
nIA1	**[Scan. IN1 address]** Address of the 1st input word		3201
nIA2	**[Scan. IN2 address]** Address of the 2nd input word		8604
nIA3	**[Scan. IN3 address]** Address of the 3rd input word		0
nIA4	**[Scan. IN4 address]** Address of the 4th input word		0
nIA5	**[Scan. IN5 address]** Address of the 5th input word		0
nIA6	**[Scan. IN6 address]** Address of the 6th input word		0
nIA7	**[Scan. IN7 address]** Address of the 7th input word		0
nIA8	**[Scan. IN8 address]** Address of the 8th input word		0
	[COM. SCANNER OUTPUT] Only accessible via graphic display terminal		
nCA1	**[Scan.Out1 address]** Address of the 1st output word		8501
nCA2	**[Scan.Out2 address]** Address of the 2nd output word		8602
nCA3	**[Scan.Out3 address]** Address of the 3rd output word		0
nCA4	**[Scan.Out4 address]** Address of the 4th output word		0
nCA5	**[Scan.Out5 address]** Address of the 5th output word		0
nCA6	**[Scan.Out6 address]** Address of the 6th output word		0
nCA7	**[Scan.Out7 address]** Address of the 7th output word		0
nCA8	**[Scan.Out8 address]** Address of the 8th output word		0

Code	Name/Description	Adjustment range	Factory setting
Md2-	**[MODBUS HMI]** Communication with the graphic display terminal		
tbr2	**[HMI baud rate]** 9.6 or 19.2 kbps via the integrated display terminal. 9,600 or 19,200 bauds via the graphic display terminal. The graphic display terminal only operates if [HMI baud rate] (tbr2) = 19,200 bauds (19.2 kbps). In order for any change in the assignment of [HMI baud rate] (tbr2) to be taken into account you must: - Provide confirmation in a confirmation window if using the graphic display terminal - Press the ENT key for 2 s if using the integrated display terminal		19.2 kbps
tFO2	**[HMI format]** Read-only parameter, cannot be modified.		8E1
Md1-	**[MODBUS NETWORK]**		
Add	**[Modbus Address]** OFF to 247		OFF
AMOA	**[Modbus add Prg C.]** Modbus address of the Controller Inside card OFF at 247 The parameter can be accessed if the Controller Inside card has been inserted and depending on its configuration (please consult the specific documentation).		OFF
AMOC	**[Modbus add Com.C.]** Modbus address of the communication card OFF to 247 The parameter can be accessed if a communication card has been inserted and depending on its configuration (please consult the specific documentation).		OFF
tbr	**[Modbus baud rate]** 4.8 – 9.6 – 19.2 – 38.4 kbps on the integrated display terminal. 4,800, 9,600, 19,200 or 38,400 bauds on the graphic display terminal.		19.2 kbps
tFO	**[Modbus format]** 8O1 – 8E1 – 8n1, 8n2		8E1
ttO	**[Modbus time out]** 0.1 to 30 s		10.0 s
CnO-	**[CANopen]**		
AdCO	**[CANopen address]** OFF to 127		OFF
bdCO	**[CANopen bit rate]** 50 – 125 – 250 – 500 kbps – 1 Mbps		125 kbps
ErCO	**[Error code]** Read-only parameter, cannot be modified.		

-	**[COMMUNICATION CARD]**	
	See the specific documentation for the card used.	
LCF-	**[FORCED LOCAL]**	
FLO nO LI1 - LI14	**[Forced local assign.]** ☐ **[No]** (nO): Function inactive ☐ **[LI1]** (LI1) to **[LI6]** (LI6) ☐ **[LI7]** (LI7) to **[LI10]** (LI10): If VW3A3201 logic I/O card has been inserted ☐ **[LI11]** (LI11) to **[LI14]** (LI14): If VW3A3202 extended I/O card has been inserted Forcing to local is active when the input is at state 1. [Forced local assign.] (FLO) is forced to [No] (nO) if [Profile] (CHCF) page 119 = [I/O profile] (IO).	[No] (nO)
FLOC nO AI1 AI2 AI3 AI4 LCC PI	**[Forced local Ref.]** ☐ **[No]** (nO): Not assigned (control via the terminals with zero reference). ☐ **[AI1]** (AI1): Analog input ☐ **[AI2]** (AI2): Analog input ☐ **[AI3]** (AI3): Analog input, if VW3A3202 extension card has been inserted ☐ **[AI4]** (AI4): Analog input, if VW3A3202 extension card has been inserted ☐ **[HMI]** (LCC): Assignment of the reference and command to the graphic display terminal. Reference: [HMI Frequency ref.] (LFr), page 45, control: RUN/STOP/FWD/REV buttons. ☐ **[RP]** (PI): Frequency input, if VW3A3202 card has been inserted If the reference is assigned to an analog input, or [RP] (PI), the command is automatically assigned to the terminals as well (logic inputs).	[No] (nO)
FLOt	**[Time-out forc. local]** 0.1 to 30 s The parameter can be accessed if [Forced local assign.] (FLO) is not [No] (nO). Time delay before communication monitoring is resumed on leaving forced local mode.	10.0 s

[1.10 DIAGNOSTICS]

This menu can only be accessed with the graphic display terminal:

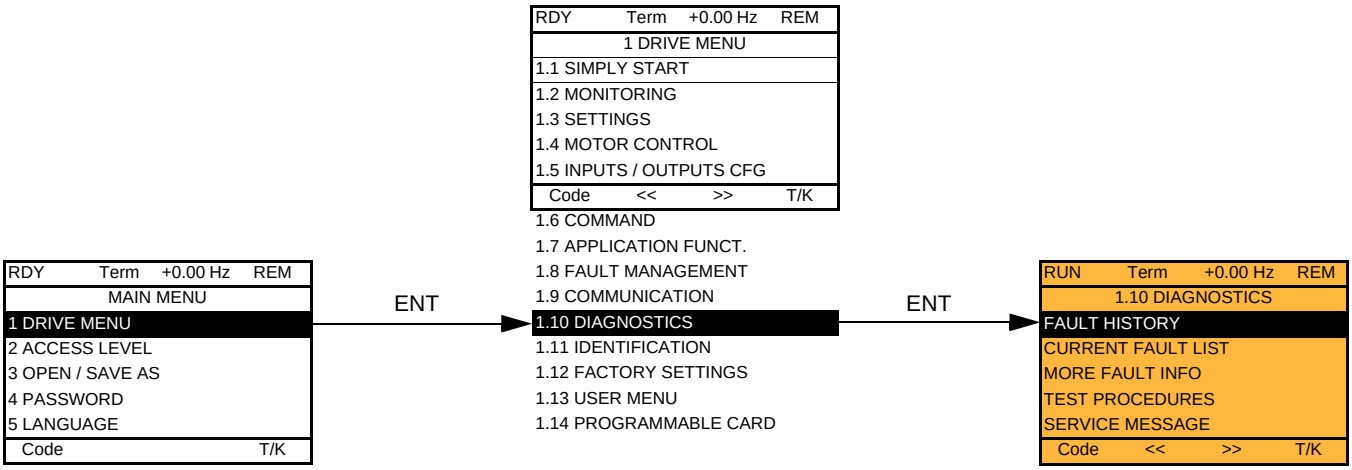

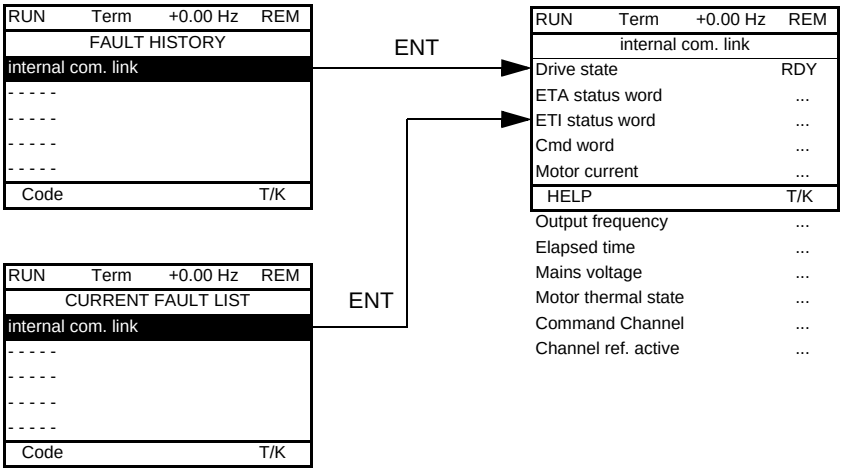

This screen indicates the state of the drive at the moment the selected fault occurred.

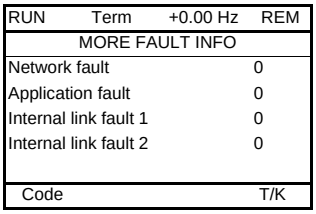

This screen indicates the number of communication faults, for example, with the option cards.
Number: 0 to 65,535

[TEST THYRISTORS] is only accessible for ATV61●●●M3 ⩾ 18.5 kW, ATV61●●●N4 drives > 18.5 kW, and all ratings of ATV61●●●Y drives.

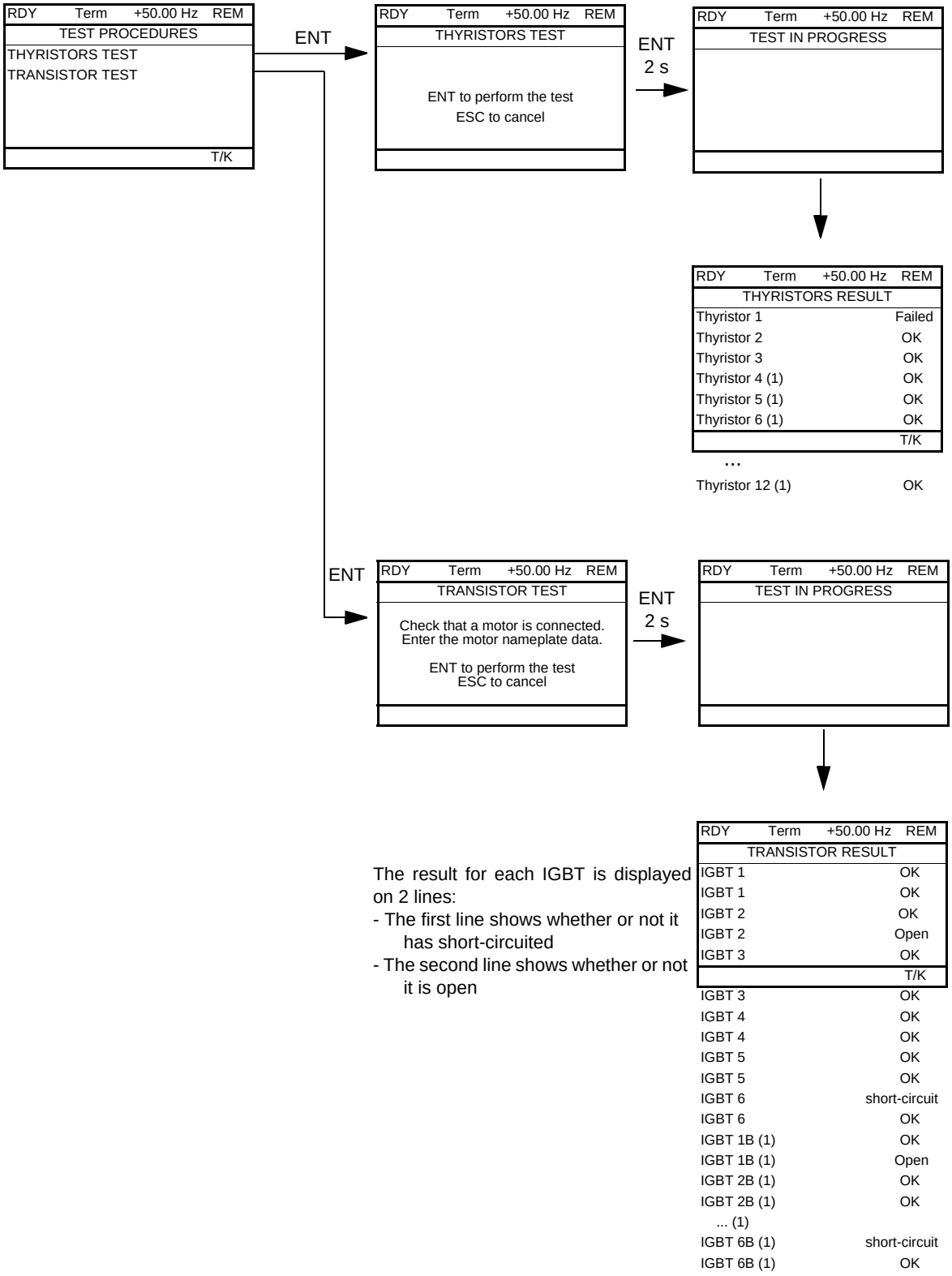

Note: To start the tests, press and hold down (2 s) the ENT key.

(1) Test results for Thyristor 4...12 and IGBT 1B ... 6B are only accessible for ATV61EC90N4 to M14N4 and ATV61EM15Y to M24Y

[1.11 IDENTIFICATION]

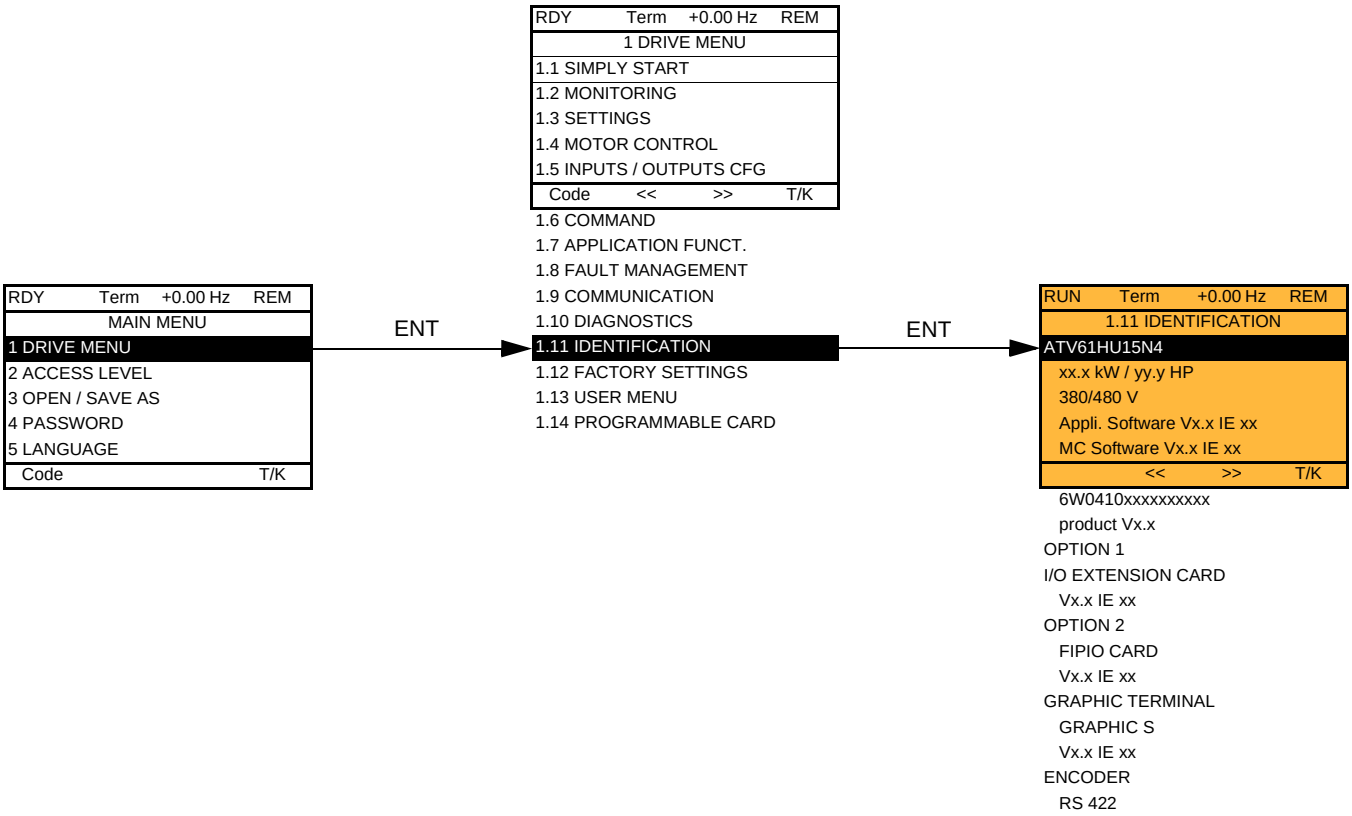

The [1.11 IDENTIFICATION] menu can only be accessed on the graphic display terminal.
This is a read-only menu that cannot be configured. It enables the following information to be displayed:

- Drive reference, power rating and voltage
- Drive software version
- Drive serial number
- Type of options present, with their software version

With graphic display terminal:

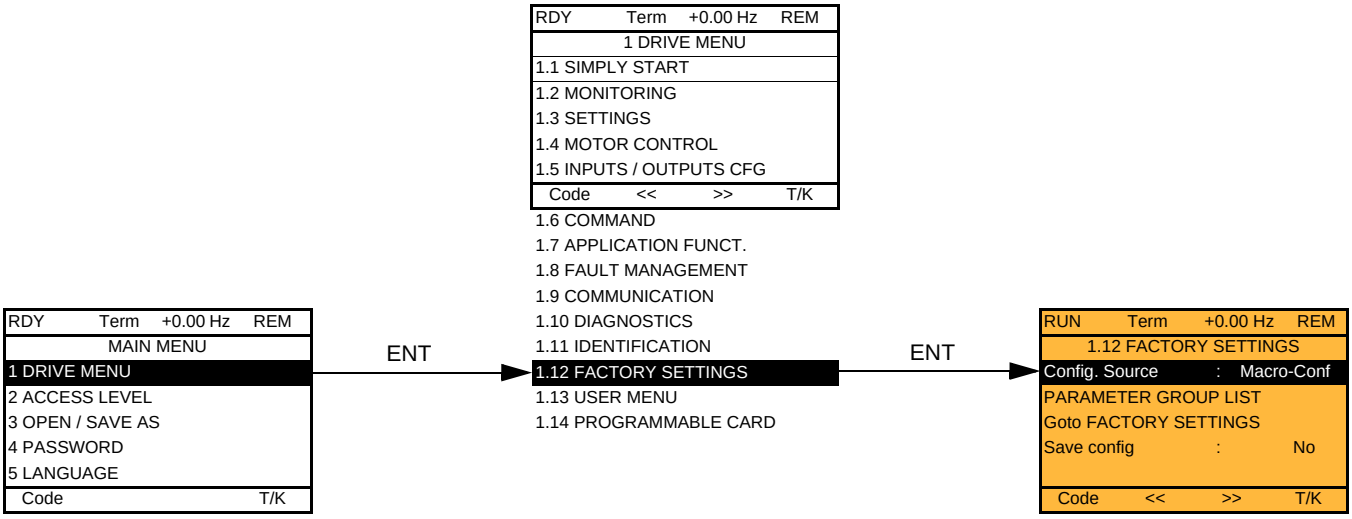

With integrated display terminal:

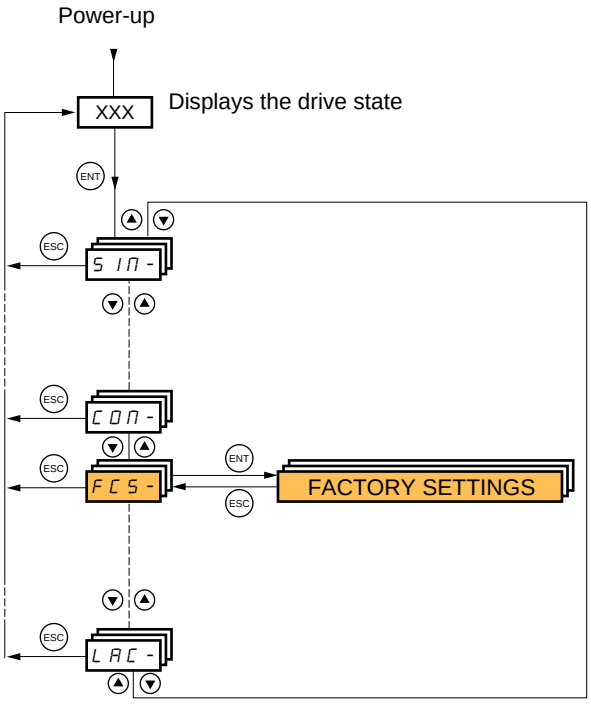

The [1.12 FACTORY SETTINGS] (FCS-) menu is used to:

- Replace the current configuration with the factory configuration or a configuration saved previously.
  All or part of the current configuration can be replaced: Select a group of parameters in order to select the menus you wish to load with the selected source configuration.
- Save the current configuration to a file.

[1.12 FACTORY SETTINGS] (FCS-)

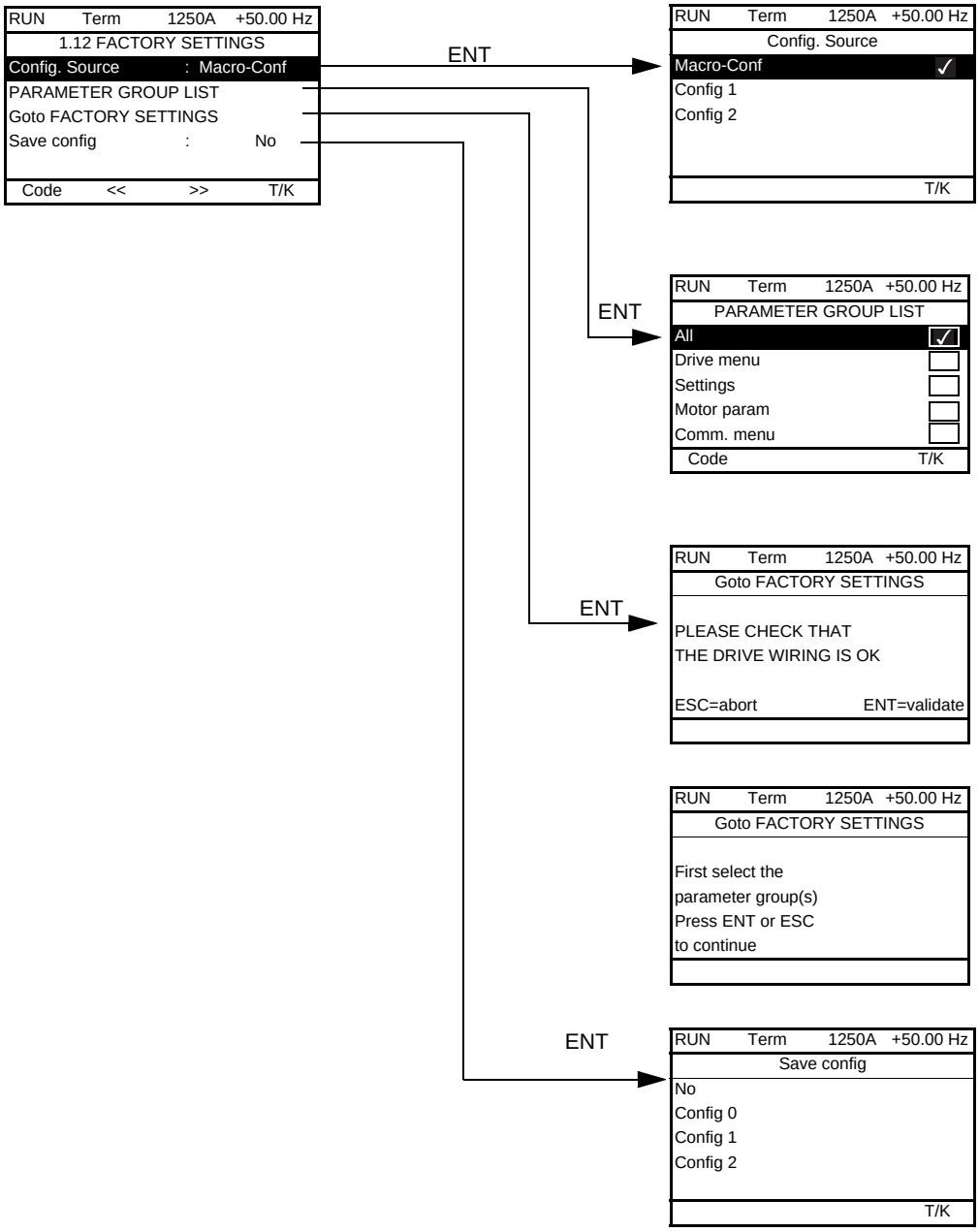

Selection of source configuration

Selection of the menus to be replaced

Note: In factory configuration and after a return to “factory settings”, [PARAMETER GROUP LIST] will be empty.

Command to return to “factory settings”

This window appears if no group of parameters is selected.

Code	Name/Description
FCSI	❑ **[Config. Source]** Choice of source configuration. The parameter cannot be accessed if the drive has locked on an [Incorrect config.] (CFF) fault. In I ☐ **[Macro-Conf]** (InI) Factory configuration, return to selected macro configuration. CFG1 ☐ **[Config 1]** (CFG1) CFG2 ☐ **[Config 2]** (CFG2) If the configuration switching function is configured, it will not be possible to access [Config 1] (CFG1) and [Config 2] (CFG2).
FrY-	❑ **[PARAMETER GROUP LIST]** Selection of menus to be loaded ALL ☐ **[All]** (ALL) : All parameters. drU ☐ **[Drive configuration]** (drV): The [1 DRIVE MENU] menu without [1.9 COMMUNICATION] and [1.14 PROGRAMMABLE CARD]. In the [7 DISPLAY CONFIG.] menu, [Return std name] page 236 returns to [No]. SEt ☐ **[Settings]** (SEt): The [1.3 SETTINGS] menu without the [IR compensation] (UFr), [Slip compensation] (SLP) and [Mot. therm. current] (ItH) parameters. MOt ☐ **[Motor param]** (MOt): Motor parameters, see list below. The following selections can only be accessed if [Config. Source] (FCSI) = [Macro-Conf.] (InI): COM ☐ **[Comm. menu]** (COM): The [1.9 COMMUNICATION] menu without either [Scan. IN1 address] (nMA1) to [Scan. IN8 address] (nMA8) or [Scan.Out1 address] (nCA1) to [Scan.Out8 address] (nCA8). PLC ☐ **[Prog. card menu]** (PLC): the [1.14 PROGRAMMABLE CARD] menu. MOn ☐ **[Monitor config.]** (MOn): The [6 MONITORING CONFIG.] menu. dIS ☐ **[Display config.]** (dIS): the [7 DISPLAY CONFIG.] menu. See the multiple selection procedure on page 26 for the integrated display terminal and page 17 for the graphic display terminal. ☞ **Note:** In factory configuration and after a return to “factory settings”, [PARAMETER GROUP LIST] will be empty.
GFS	❑ **[Goto FACTORY SETTINGS]** It is only possible to revert to the factory settings if at least one group of parameters has previously been selected. With the integrated display terminal: nO - No YES - Yes: The parameter changes back to nO automatically as soon as the operation is complete. With the graphic display terminal: See the previous page.
SCSI	❑ **[Save config]** nO ☐ **[No]** (nO): Str0 ☐ **[Config 0]** (Str0): Press the “ENT” key for 2 s. Str1 ☐ **[Config 1]** (Str1): Press the “ENT” key for 2 s. Str2 ☐ **[Config 2]** (Str2): Press the “ENT” key for 2 s. The active configuration to be saved does not appear for selection. For example, if the active configuration is [Config 0] (Str0), only [Config 1] (Str1) and [Config 2] (Str2) appear. The parameter changes back to [No] (nO) automatically as soon as the operation is complete.

List of motor parameters

[1.4 MOTOR CONTROL] (drC-) menu:

[Rated motor power] (nPr) – [Rated motor volt.] (UnS) – [Rated mot. current] (nCr) – [Rated motor freq.] (FrS) – [Rated motor speed] (nSP) – [Auto tuning] (tUn) – [Auto tuning status] (tUS) – [U/F Profile] (PFL) – [U0] (U0) to [U5] (U5) – [F1] (F1) to [F5] (F5) – [V. constant power] (UCP) - [Freq. Const Power] (FCP) – [Nominal I sync.] (nCrS) – [Nom motor spdsync] (nSPS) – [Pole pairs] (PPnS) – [Syn. EMF constant] (PHS) – [Autotune L d-axis] (LdS) – [Autotune L q-axis] (LqS) – [Cust. stator R syn] (rSAS) – [IR compensation] (UFr) – [Slip compensation] (SLP) – motor parameters that can be accessed in [Expert] mode, page 74.

[1.3 SETTINGS] (SEt-) menu:

[Mot. therm. current] (ItH)

Example of total return to factory settings

1. [Config. Source] (FCSI) = [Macro-Conf] (InI)
2. [PARAMETER GROUP LIST] (FrY-) = [All] (ALL)
3. [Goto FACTORY SETTINGS] (GFS = YES)

[1.13 USER MENU] (USr-)

This menu contains the parameters selected in the [7 DISPLAY CONFIG.] menu on page 235.

With graphic display terminal:

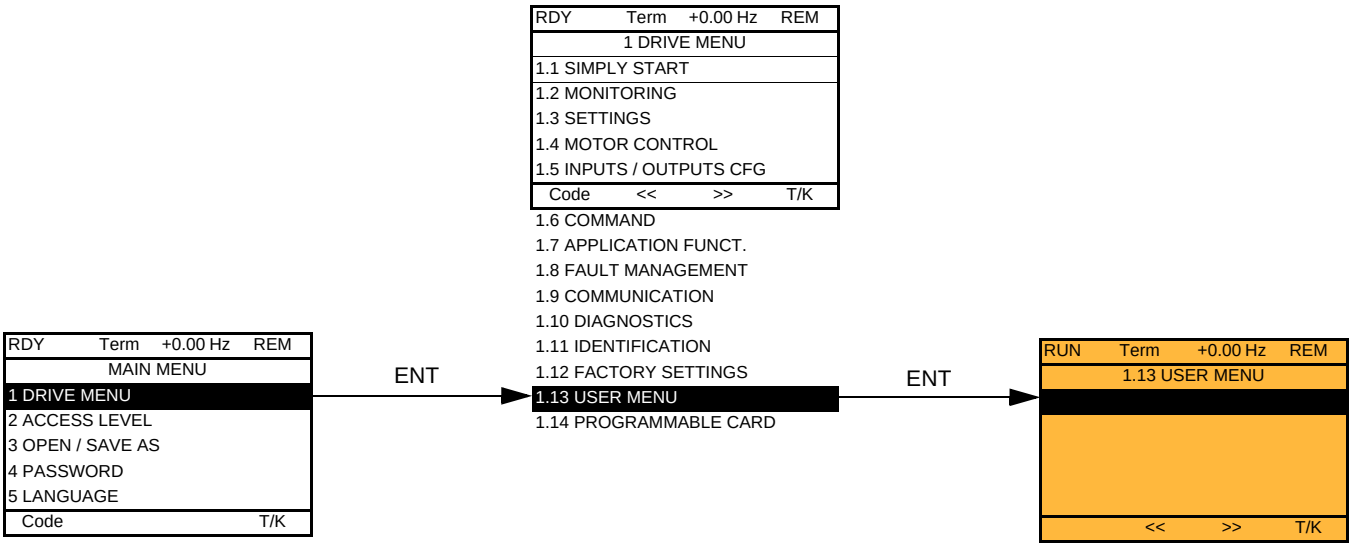

With integrated display terminal:

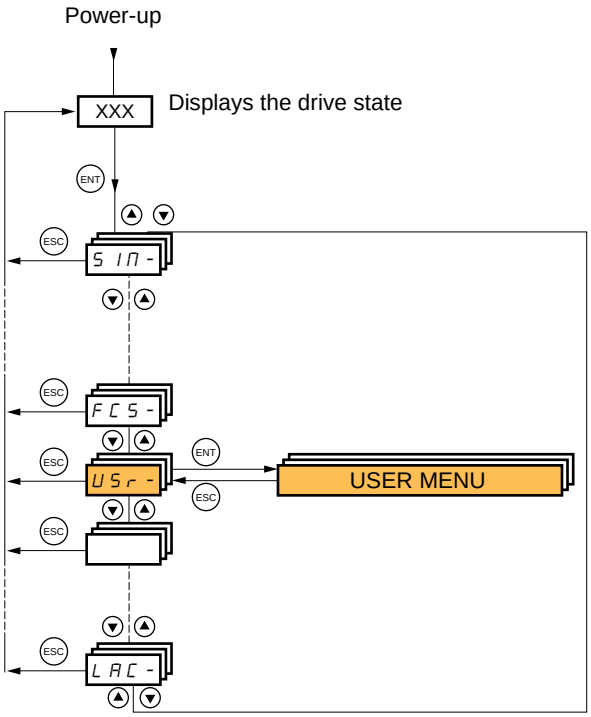

[1.14 PROGRAMMABLE CARD] (PLC-)

This menu can only be accessed if a Controller Inside card has been inserted. Please refer to the documentation specific to this card.

With graphic display terminal:

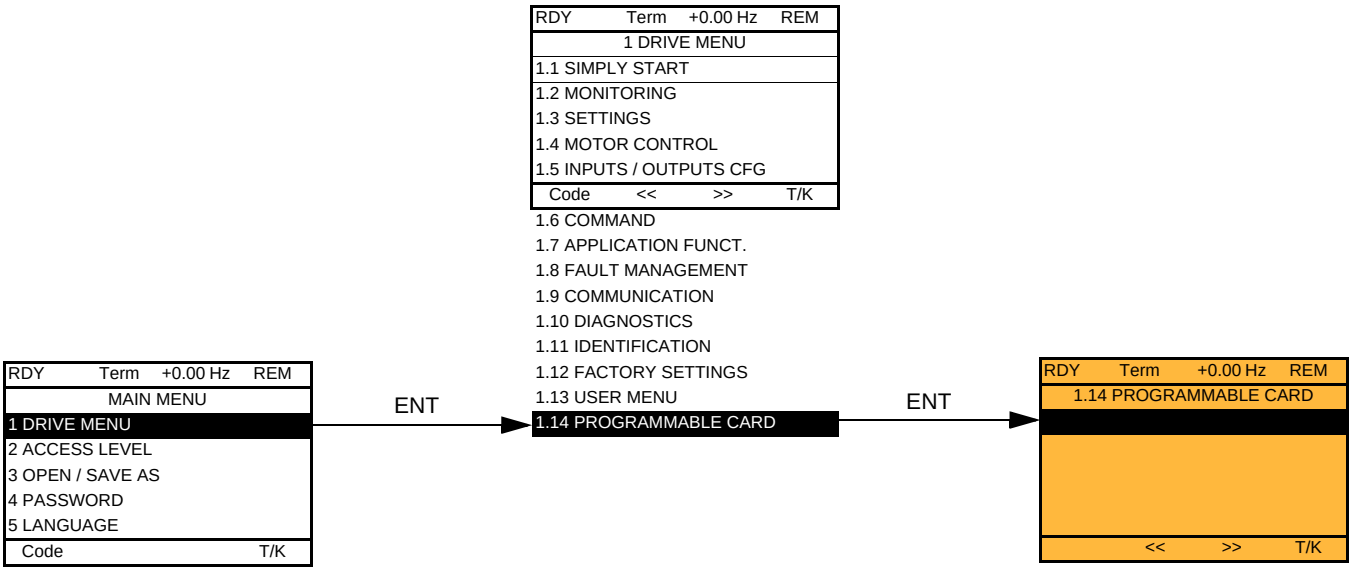

With integrated display terminal:

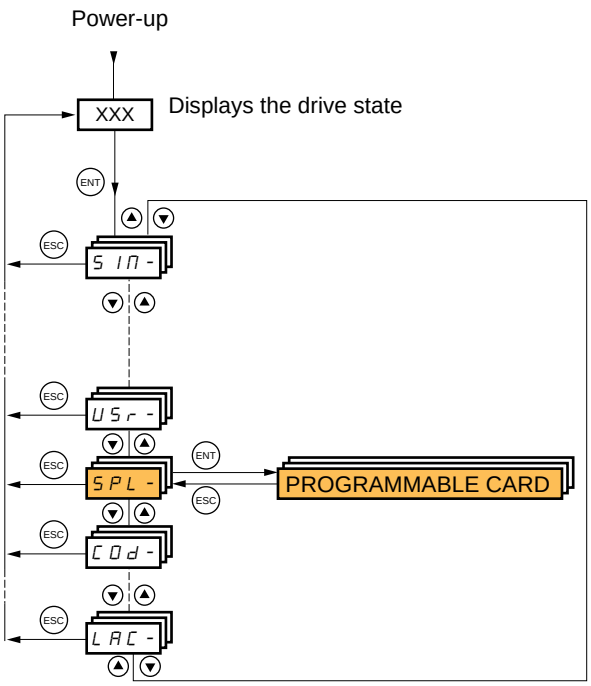

[3. OPEN / SAVE AS]

This menu can only be accessed with the graphic display terminal.

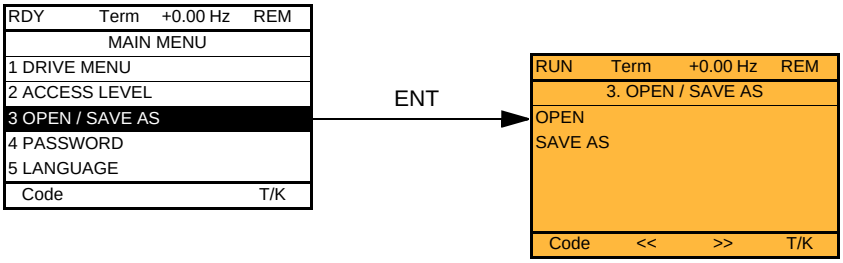

[OPEN]: To download one of the 4 files from the graphic display terminal to the drive.
[SAVE AS]: To download the current configuration from the drive to the graphic display terminal.

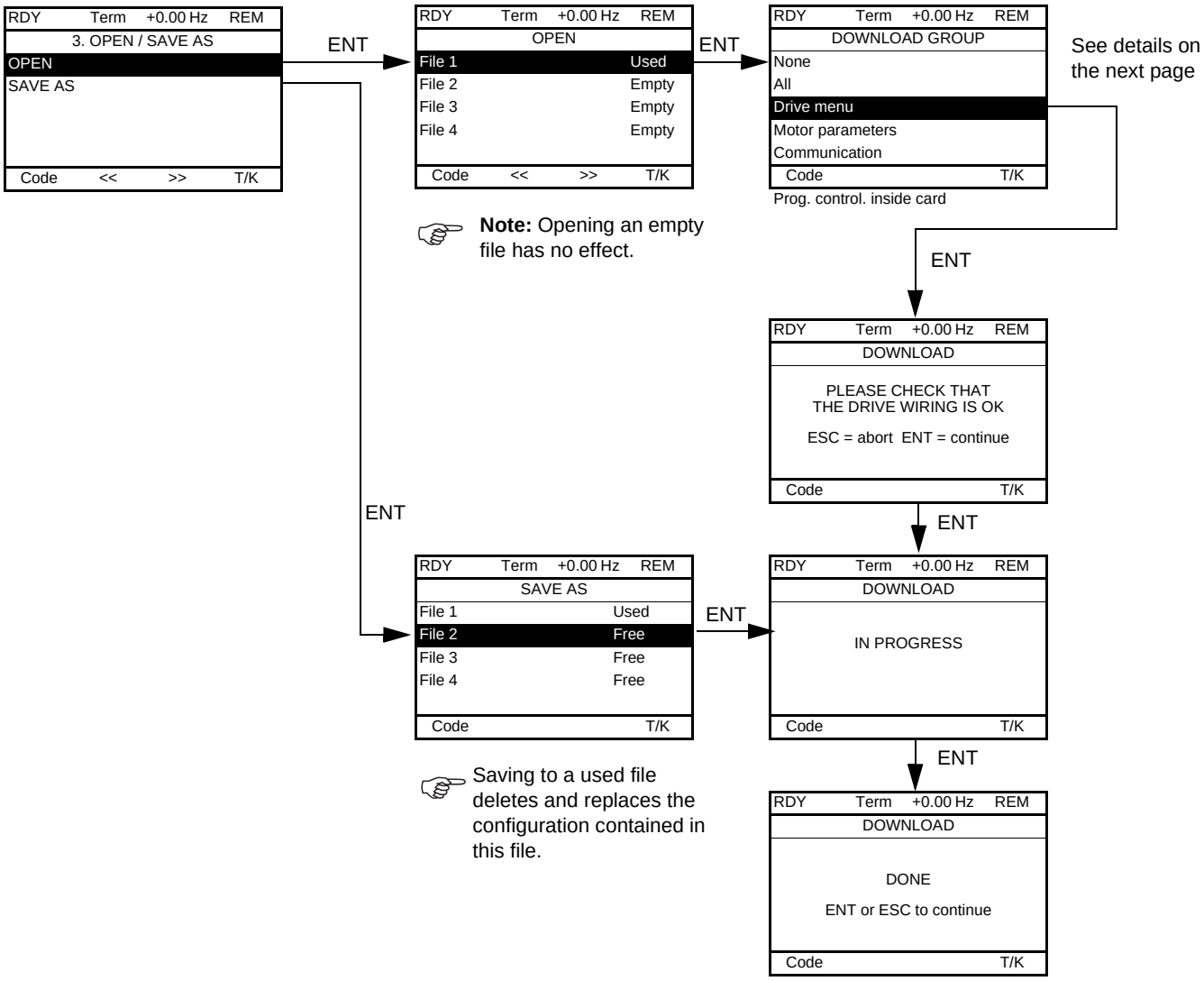

Various messages may appear when the download is requested:

- [IN PROGRESS]
- [DONE]
- Error messages if download not possible
- [Motor parameters are NOT COMPATIBLE. Do you want to continue?]: In this case the download is possible, but the parameters will be restricted.

[DOWNLOAD GROUP]

[None]:		No parameters
[All]:		All parameters in all menus
[Drive configuration]:		The entire [1 DRIVE MENU] without [1.9 COMMUNICATION] and [1.14 PROGRAMMABLE CARD].
[Motor parameters]:	[Rated motor power] (nPr)	in the [1.4 MOTOR CONTROL] (drC-) menu
	[Rated motor volt.] (UnS)	
	[Rated mot. current] (nCr)	
	[Rated motor freq.] (FrS)	
	[Rated motor speed] (nSP)	
	[Auto tuning] (tUn)	
	[Auto tuning status] (tUS)	
	[U/F Profile] (PFL)	
	[U0] (U0) to [U5] (U5)	
	[F1] (F1) to [F5] (F5)	
	[V. constant power] (UCP)	
	[Freq. Const Power] (FCP)	
	[Nominal I sync.] (nCrS)	
	[Nom motor spdsync] (nSPS)	
	[Pole pairs] (PPnS)	
	[Syn. EMF constant] (PHS)	
	[Autotune L d-axis] (LdS)	
	[Autotune L q-axis] (LqS)	
	[Cust. stator R syn] (rSAS)	
	[IR compensation] (UFr)	
	[Slip compensation] (SLP)	
	The motor parameters that can be accessed in [Expert] mode, page 74	
	[Mot. therm. current] (ItH)	in the [1.3 SETTINGS] (SEt-) menu
[Communication]:		All the parameters in the [1.9 COMMUNICATION] menu
[Prog. control. inside card]:		All the parameters in the [1.14 PROGRAMMABLE CARD] menu

[4. PASSWORD] (COd-)

With graphic display terminal:

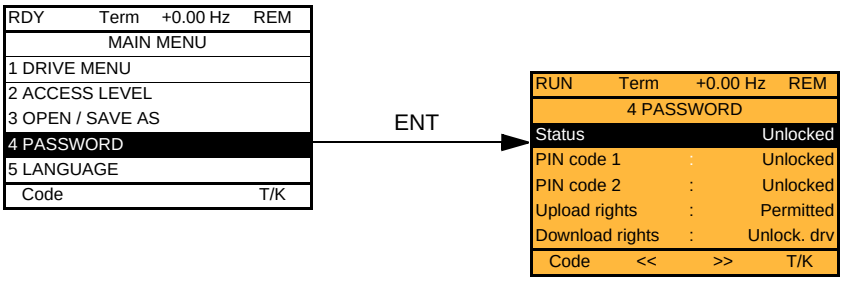

With integrated display terminal:

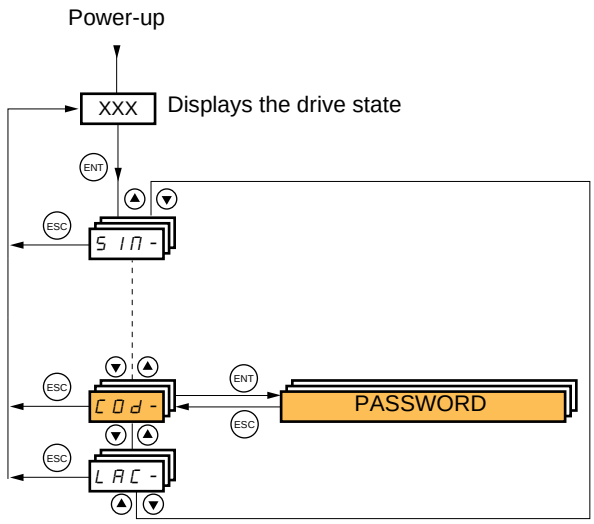

Enables the configuration to be protected with an access code or a password to be entered in order to access a protected configuration.

Example with graphic display terminal:

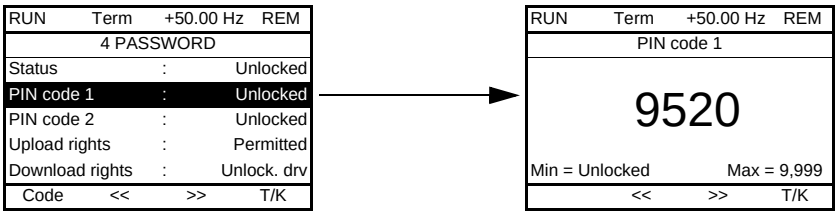

- The drive is unlocked when the PIN codes are set to [Unlocked] (OFF) (no password) or when the correct code has been entered. All menus are visible.
- Before protecting the configuration with an access code, you must:
  - Define the [Upload rights] (ULr) and [Download rights] (dLr).
  - Make a careful note of the code and keep it in a safe place where you will always be able to find it.
- The drive has 2 access codes, enabling 2 access levels to be set up.
  - PIN code 1 is a public unlock code: 6969.
  - PIN code 2 is an unlock code known only to Schneider Electric Product Support. It can only be accessed in [Expert] mode.
  - Only one PIN1 or PIN2 code can be used – the other must remain set to [OFF] (OFF).

Note: When the unlock code is entered, the user access code appears.

The following items are access-protected:
- Return to factory settings ([1.12 FACTORY SETTINGS] (FCS-) menu.
- The channels and parameters protected by the [1.13 USER MENU] as well as the menu itself.
- The custom display settings ([7 DISPLAY CONFIG.] menu).

Code	Name/Description	Adjustment range	Factory setting
CSt	❑ **[Status]** Information parameter, cannot be modified. LC ☐ **[Locked]** (LC): The drive is locked by a password. ULC ☐ **[Unlocked]** (ULC): The drive is not locked by a password.		[Unlocked] (ULC)
COd	❑ **[PIN code 1]** 1st access code. The value [OFF] (OFF) indicates that no password has been set [Unlocked]. The value [ON] (On) indicates that the drive is protected and an access code must be entered in order to unlock it. Once the correct code has been entered, it remains on the display and the drive is unlocked until the next time the power supply is disconnected. - PIN code 1 is a public unlock code: 6969.	OFF to 9,999	[OFF] (OFF)
COd2	❑ **[PIN code 2]** Parameter can only be accessed in [Expert] mode. 2nd access code. The value [OFF] (OFF) indicates that no password has been set [Unlocked]. The value [ON] (On) indicates that the drive is protected and an access code must be entered in order to unlock it. Once the correct code has been entered, it remains on the display and the drive is unlocked until the next time the power supply is disconnected. - PIN code 2 is an unlock code known only to Schneider Electric Product Support. When [PIN code 2] (COd2) is not set to OFF, the [1.2 MONITORING] (SUP-) menu is the only one visible. Then if [PIN code 2] (COd2) is set to OFF (drive unlocked), all menus are visible. If the display settings are modified in [7 DISPLAY CONFIG.] menu, and if [PIN code 2] (COd2) is not set to OFF, the visibility configured is kept. Then if [PIN code 2] (COd2) is set to OFF (drive unlocked), the visibility configured in [7 DISPLAY CONFIG.] menu is kept.	OFF to 9,999	[OFF] (OFF)
ULr	❑ **[Upload rights]** Read or copy the current configuration to the drive ULr0 ☐ **[Permitted]** (ULr0): The current drive configuration can always be uploaded to the graphic display terminal or PC-Software. ULr1 ☐ **[Not allowed]** (ULr1): The current drive configuration can only be uploaded to the graphic display terminal or PC-Software if the drive is not protected by an access code or if the correct code has been entered.		[Permitted] (ULr0)
dLr	❑ **[Download rights]** Writes the current configuration to the drive or downloads a configuration to the drive dLr0 ☐ **[Locked drv]** (dLr0): A configuration file can only be downloaded to the drive if the drive is protected by an access code, which is the same as the access code for the configuration to be downloaded. dLr1 ☐ **[Unlock. drv]** (dLr1): A configuration file can be downloaded to the drive or a configuration in the drive can be modified if the drive is unlocked (access code entered) or is not protected by an access code. dLr2 ☐ **[not allowed]** (dLr2): Download not authorized. dLr3 ☐ **[Lock/unlock]** (dLr3): Combination of [Locked drv] (dLr0) and [Unlock. drv] (dLr1).		[Unlock. drv] (dLr1)

[6 MONITORING CONFIG.]

This menu can only be accessed with the graphic display terminal.

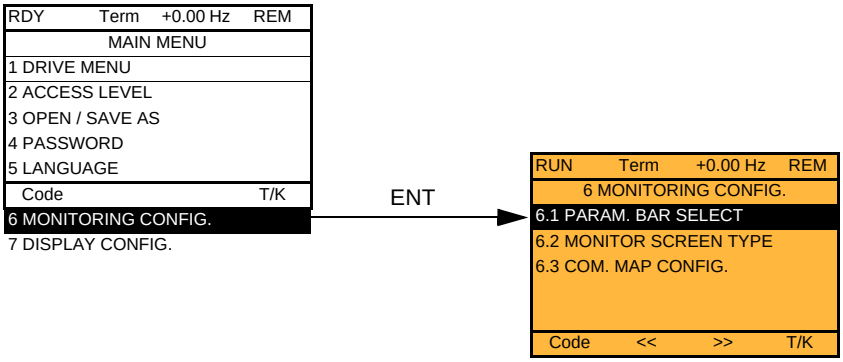

This can be used to configure the information displayed on the graphic display screen during operation.

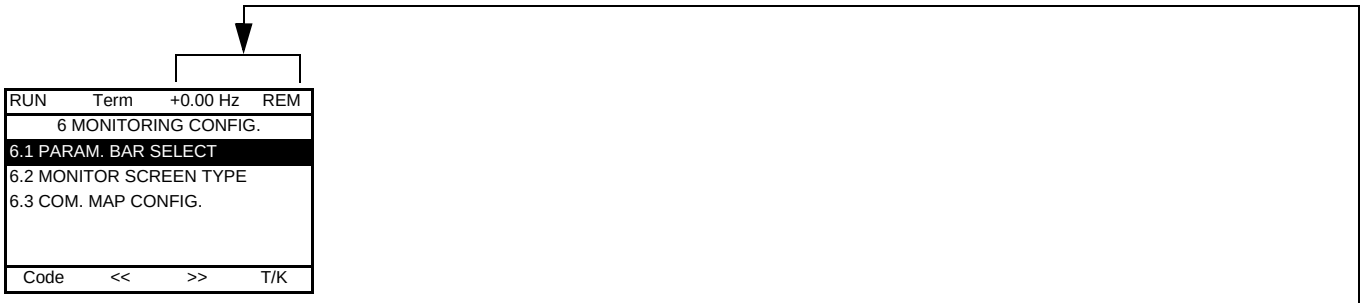

[6.1 PARAM. BAR SELECT]: Selection of 1 to 2 parameters displayed on the top line (the first 2 cannot be modified).

[6.2. MONITOR SCREEN TYPE]: Selection of parameters displayed in the centre of the screen and the display mode (values in digita or bar graph format).

[6.3. COM. MAP CONFIG.]: Selection of the words displayed and their format.

Name/Description

[6.1 PARAM. BAR SELECT]

☐ [Alarm groups]	
☐ [Frequency ref.]	in Hz: parameter displayed in factory configuration
☐ [Output frequency]	in Hz
☐ [Motor current]	in A
☐ [Motor speed]	in rpm
☐ [Motor voltage]	in V
☐ [Motor power]	in W
☐ [Motor torque]	as a %
☐ [Mains voltage]	in V
☐ [Motor thermal state]	as a %
☐ [Drv. thermal state]	as a %
☐ [DBR thermal state]	as a %
☐ [Input Power]	in W or kW depending on drive rating
☐ [Consumption]	in Wh or kWh depending on drive rating
☐ [Run time]	in hours (length of time the motor has been switched on)
☐ [Power on time]	in hours (length of time the drive has been switched on)
☐ [IGBT alarm counter]	in seconds (total time of IGBT overheating alarms)
☐ [PID reference]	as a %
☐ [PID feedback]	as a %
☐ [PID error]	as a %
☐ [PID Output]	in Hz
☐ [- - - - 2]	Word generated by the Controller Inside card (can be accessed if the card has been inserted)
to	
☐ [- - - - 6]	Word generated by the Controller Inside card (can be accessed if the card has been inserted)
☐ [Config. active]	CNFO, 1 or 2 (see page 178)
☐ [Utilised param. set]	SET1, 2 or 3 (see page 176)
☐ [Local / Remote]	Display factory configuration. “LOC” appears if the command and reference are set via the graphic display terminal; otherwise, “REM” appears. This corresponds to the state selected by the [T/K] function key, page 122.

Select the parameter using ENT (a ☑ then appears next to the parameter). Parameter(s) can also be deselected using ENT. 1 or 2 parameters can be selected.

Example:

PARAM. BAR SELECT	
MONITORING	
- - - - - - - - -	☑
- - - - - - - - -	☐
- - - - - - - - -	☐
- - - - - - - - -	☑

Name/Description

[6.2. MONITOR SCREEN TYPE]

[Display value type]

- ☐ **[Digital]**: Display of one or two digital values on the screen (factory configuration).
- ☐ **[Bar graph]**: Display of one or two bar graphs on the screen.
- ☐ **[List]**: Display a list of between one and five values on the screen.

[PARAMETER SELECTION]

☐ **[Alarm groups]**	can only be accessed if [Display value type] = [List]
☐ **[Frequency ref.]**	in Hz: parameter displayed in factory configuration
☐ **[Output frequency]**	in Hz
☐ **[Motor current]**	in A
☐ **[Motor speed]**	in rpm
☐ **[Motor voltage]**	in V
☐ **[Motor power]**	in W
☐ **[Motor torque]**	as a %
☐ **[Mains voltage]**	in V
☐ **[Motor thermal state]**	as a %
☐ **[Drv. thermal state]**	as a %
☐ **[DBR thermal state]**	as a %
☐ **[Input Power]**	in W or kW depending on drive rating
☐ **[Consumption]**	in Wh or kWh depending on drive rating
☐ **[Run time]**	in hours (length of time the motor has been switched on)
☐ **[Power on time]**	in hours (length of time the drive has been switched on)
☐ **[IGBT alarm counter]**	in seconds (total time of IGBT overheating alarms)
☐ **[PID reference]**	as a %
☐ **[PID feedback]**	as a %
☐ **[PID error]**	as a %
☐ **[PID Output]**	in Hz
☐ **[- - - - 2]**	Word generated by the Controller Inside card (can be accessed if the card has been inserted)
to	
☐ **[- - - - 6]**	Word generated by the Controller Inside card (can be accessed if the card has been inserted)
☐ **[Config. active]**	CNFO, 1 or 2 (see page 178), can only be accessed if [Display value type] = [List]
☐ **[Utilised param. set]**	SET1, 2 or 3 (see page 176), can only be accessed if [Display value type] = [List]

Select the parameter(s) using ENT (a ☑ then appears next to the parameter). Parameter(s) can also be deselected using ENT.

PARAMETER SELECTION	
MONITORING	
- - - - - - - - -	✓
- - - - - - - - -	
- - - - - - - - -	
- - - - - - - - -	✓

Examples:

Display of 2 digital values

RUN	Term	+35.00 Hz	REM
Motor speed			
1,250 rpm			
Motor current			
80 A			
			T/K

Display of 2 bar graphs

RUN	Term	+35.00 Hz	REM
Min	Motor speed		max
0	1,250 rpm		1,500
Min	Motor current		max
0	80 A		150
			T/K

Display of a list of 5 values

RUN	Term	+35.00 Hz	REM
MONITORING			
Frequency ref.	:	50.1 Hz	
Motor current	:	80 A	
Motor speed	:	1,250 rpm	
Motor thermal state	:	80%	
Drv thermal state	:	80%	
			T/K

Name/Description

[6.3. COM. MAP CONFIG.]

[Word 1 add. select.]

Select the address of the word to be displayed by pressing the <<, >> (F2 and F3) keys and rotating the navigation button.

[Format word 1]

Format of word 1.

- **[Hex]**: Hexadecimal
- **[Signed]**: Decimal with sign
- **[Unsigned]**: Decimal without sign

[Word 2 add. select.]

Select the address of the word to be displayed by pressing the <<, >> (F2 and F3) keys and rotating the navigation button.

[Format word 2]

Format of word 2.

- **[Hex]**: Hexadecimal
- **[Signed]**: Decimal with sign
- **[Unsigned]**: Decimal without sign

[Word 3 add. select.]

Select the address of the word to be displayed by pressing the <<, >> (F2 and F3) keys and rotating the navigation button.

[Format word 3]

Format of word 3.

- **[Hex]**: Hexadecimal
- **[Signed]**: Decimal with sign
- **[Unsigned]**: Decimal without sign

[Word 4 add. select.]

Select the address of the word to be displayed by pressing the <<, >> (F2 and F3) keys and rotating the navigation button.

[Format word 4]

Format of word 4.

- **[Hex]**: Hexadecimal
- **[Signed]**: Decimal with sign
- **[Unsigned]**: Decimal without sign

It will then be possible to view the selected words in the [COMMUNICATION MAP] submenu of the [1.2 MONITORING] menu.
Example:

```
RUN        Term      +35.00 Hz   REM
        COMMUNICATION MAP
- - - - - - - - - - -
- - - - - - - - - - -
W3141          :   F230 Hex

              <<          >>          T/K
```

[7 DISPLAY CONFIG.]

This menu can only be accessed with the graphic display terminal. It can be used to customize parameters or a menu and to access parameters.

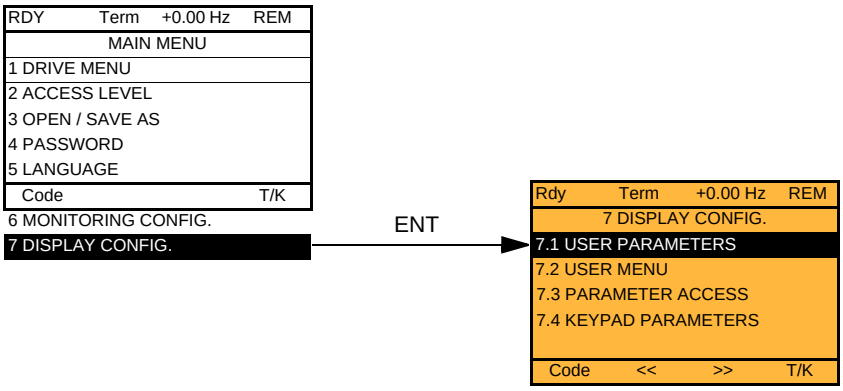

7.1 USER PARAMETERS: Customization of 1 to 15 parameters.

7.2 USER MENU: Creation of a customized menu.

7.3 PARAMETER ACCESS: Customization of the visibility and protection mechanisms of menus and parameters.

7.4 KEYPAD PARAMETERS: Adjustment of the contrast and stand-by mode of the graphic display terminal (parameters stored in the terminal rather than in the drive). Choice of the menu displayed on power up.

If [Return std name] = [Yes] the display reverts to standard but the custom settings remain stored.

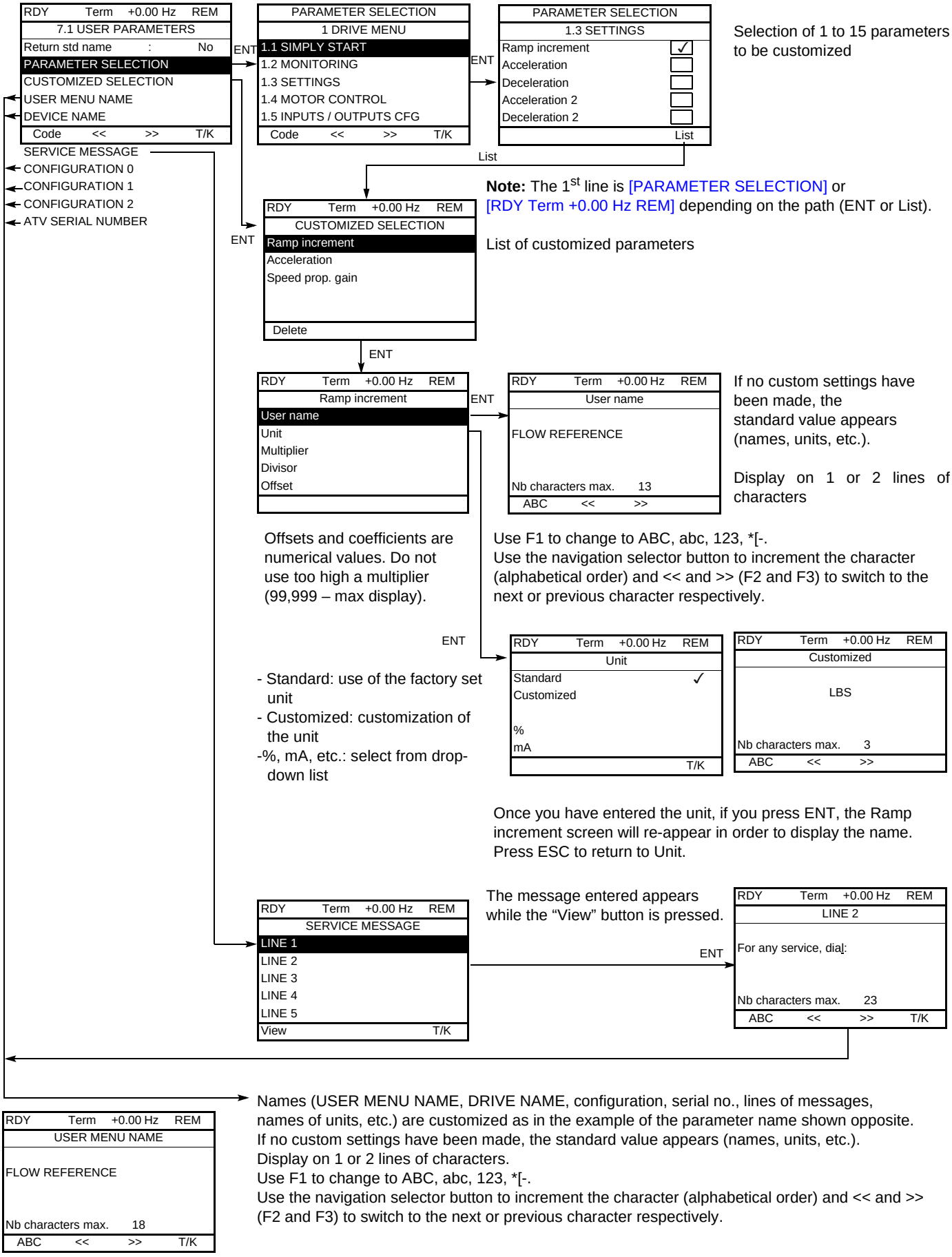

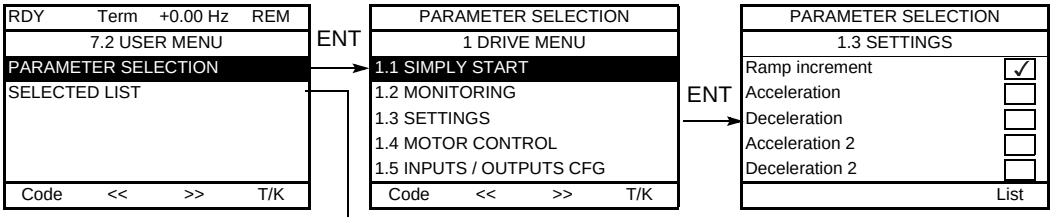

Selection of parameters included in the user menu

List

Note: The 1st line is [PARAMETER SELECTION] or [RDY Term +0.00 Hz REM] depending on the path (ENT or List).

ENT

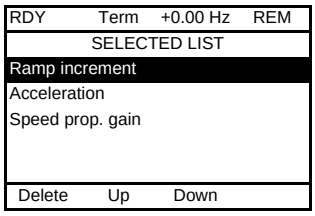

Parameter list making up the user menu.

Use the F2 and F3 keys to arrange the parameters in the list (example below using F3).

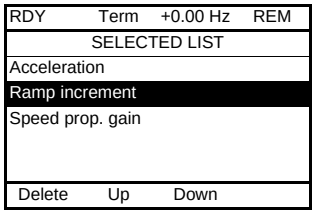

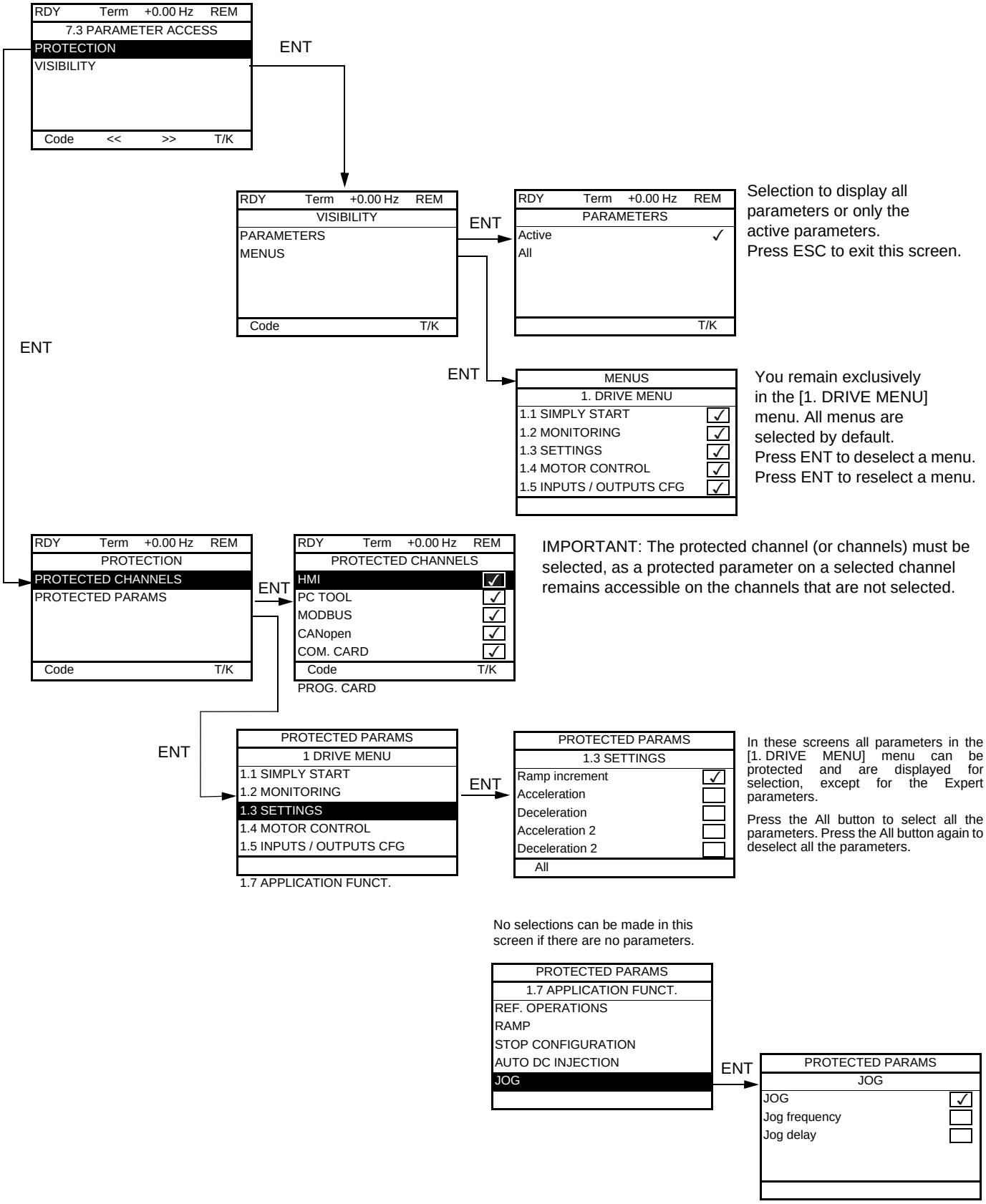

Note: The protected parameters are no longer accessible and are not, therefore, displayed for the selected channels.

RDY	Term	+0.00Hz	REM
7.4 KEYPAD PARAMETERS			
Keypad contrast			
Keypad stand-by			
Power up menu			
Code	<<	>>	T/K

Name/Description	Adjustment range	Factory setting
❑ **[Keypad contrast]** Adjustment of contrast on the graphic display unit	0 to 100%	50%
❑ **[Keypad stand-by]**		[5]
Configures and adjusts the stand-by mode of the graphic display unit. ☐ **[No]**: No stand-by mode. ☐ **[1]** to **[10]**: Adjusts the time during which the terminal is to remain idle before stand-by mode is triggered, in minutes. After this idle time, the display backlight turns off and the contrast is reduced. The screen returns to normal operation when a key or the navigation button is pressed. It also returns to normal operation if the terminal exits the normal display mode, for example, if a fault occurs.		
❑ **[Power up menu]** Choice of menu which appears on the product on power-up ☐ **[Drive configuration]**: Displays the drive configuration. ☐ **[Sim. start]**: Displays the simply start menu. ☐ **[Monitoring]**: Displays the monitoring menu. ☐ **[Settings]**: Displays the settings menu. ☐ **[Mot. Ctrl]**: Displays the control motor menu. ☐ **[I/O Conf.]**: Displays the inputs / outputs configuration menu. ☐ **[Command]**: Displays the command menu. ☐ **[Appli. fun.]**: Displays the application function menu. ☐ **[Fault mgt]**: Displays the fault management menu. ☐ **[Com.]**: Displays the communication menu. ☐ **[Diagnostics]**: Displays the diagnostics menu. ☐ **[Ident.]**: Displays the identification menu. ☐ **[Factory Set.]**: Displays the factory settings menu. ☐ **[User menu]**: Displays the user menu. ☐ **[CI menu]**: Displays the card CI menu. ☐ **[Main menu]**: Displays the main menu.		[Main menu]

[MULTIPOINT SCREEN]

Communication is possible between a graphic display terminal and a number of drives connected on the same bus. The addresses of the drives must be configured in advance in the [1.9 COMMUNICATION] menu using the [Modbus Address] (Add) parameter, page 217.

When a number of drives are connected to the same display terminal, the terminal automatically displays the following screens:

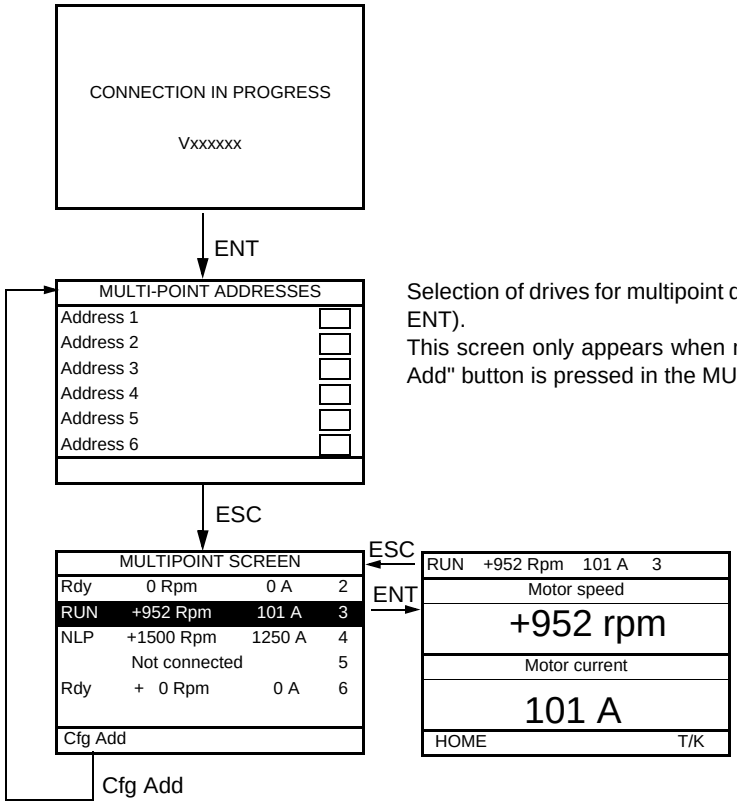

Selection of drives for multipoint dialog (select each address and check it by pressing ENT).
This screen only appears when making a connection for the first time or if the "Cfg Add" button is pressed in the MULTIPOINT SCREEN below.

Selection of a drive for multipoint dialog.

In multipoint mode, the command channel is not displayed. The state, then the 2 selected parameters and the drive address appear from left to right.

All menus can be accessed in multipoint mode. Only drive control via the graphic display terminal is not authorized, apart from the Stop key, which locks all the drives.
If there is a fault on a drive, this drive is displayed.

Servicing

The Altivar 61 does not require any preventive maintenance. It is nevertheless advisable to perform the following regularly:

- Check the condition and tightness of the connections.
- Ensure that the temperature around the unit remains at an acceptable level and that ventilation is effective (average service life of fans: 3 to 5 years depending on the operating conditions).
- Remove any dust from the drive.

Assistance with maintenance, fault display

If a problem arises during setup or operation, first check that the recommendations relating to the environment, mounting and connections have been observed.

The first fault detected is saved and displayed, and the drive locks.
The drive switching to fault mode can be indicated remotely via a logic output or a relay, which can be configured in the [1.5 INPUTS / OUTPUTS CFG] (I-O-) menu, see, for example, [R1 CONFIGURATION] (r1-) page 96.

[1.10 DIAGNOSTICS] menu

This menu can only be accessed with the graphic display terminal. It displays faults and their cause in plain text and can be used to carry out tests, see page 219.

Clearing the fault

Disconnect the drive power supply in the event of a non-resettable fault.
Wait for the display to disappear completely.
Find the cause of the fault in order to correct it.

The drive is unlocked after a fault:

- By switching off the drive until the display disappears completely, then switching on again
- Automatically in the scenarios described for the [AUTOMATIC RESTART] (Atr-) function, page 193
- By means of a logic input or control bit assigned to the [FAULT RESET] (rSt-) function, page 192
- By pressing the STOP/RESET button on the graphic display terminal

[1.2 MONITORING] (SUP-) menu:

This is used to prevent and find the causes of faults by displaying the drive state and its current values.
It can be accessed with the integrated display terminal.

Spares and repairs:

Consult Schneider Electric product support.

Starter does not start, no fault displayed

- If the display does not light up, check the power supply to the drive.
- The assignment of the “Fast stop” or “Freewheel” functions will prevent the drive starting if the corresponding logic inputs are not powered up. The ATV61 then displays [Freewheel] (nSt) in freewheel stop and [Fast stop] (FSt) in fast stop. This is normal since these functions are active at zero so that the drive will be stopped safely if there is a wire break.
- Make sure that the run command input or inputs are activated in accordance with the selected control mode ([2/3 wire control] (tCC) and [2 wire type] (tCt) parameters, page 82).
- If the reference channel or command channel is assigned to a communication bus, when the power supply is connected, the drive will display [Freewheel] (nSt) and remain in stop mode until the communication bus sends a command.

Faults, which cannot be reset automatically

The cause of the fault must be removed before resetting by turning off and then back on.
AI2F, EnF, SOF, SPF, and tnF faults can also be reset remotely by means of a logic input or control bit ([Fault reset] (rSF) parameter, page 192).
EnF, InFA, InFb, SOF, SPF, and tnF faults can be inhibited and cleared remotely by means of a logic input or control bit ([Fault inhibit assign.] (InH) parameter, page 203).

Fault	Name	Probable cause	Remedy
AI2F	[AI2 input]	• Non-conforming signal on analog input AI2	• Check the wiring of analog input AI2 and the value of the signal • If necessary, modify the fault configuration via [AI2 4-20mA loss] (LFL2), page 202
bOF	[DBR overload]	• The braking resistor is under excessive stress	• Check the size of the resistor and wait for it to cool down • Check the [DB Resistor Power] (brP) and [DB Resistor value] (brU) parameters, page 208.
bUF	[DB unit sh. Circuit]	• Short-circuit output from braking unit • Braking unit not connected	• Check the wiring of the braking unit and the resistor • Check the braking resistor • The monitoring of this fault must be disabled by the [Brake res. fault Mgt] (bUb) parameter, page 208 if there is no braking unit or resistor connected to the drive, at and above 55 kW (75 HP) for ATV61H●●●M3X and at and above 90 kW (120 HP) for ATV61H●●●N4.
CrF1	[Precharge]	• Load relay control fault or charging resistor damaged	• Switch the drive off and then back on again • Check the internal connections • Inspect/repair the drive
CrF2	[Thyr. soft charge]	• DC bus charging fault (thyristors)	
dCF	[Differential curent Fault]	• Current difference between power block A and B (ATV61EC60 ... M14N4 or ATVEM15...M24Y only)	• Check thyristor with [TEST THYRISTORS] • Check IGBT with [TRANSISTOR TEST] • Check current transformer
EEF1	[Control Eeprom]	• Internal memory fault, control card	• Check the environment (electromagnetic compatibility) • Turn off, reset, return to factory settings • Inspect/repair the drive
EEF2	[Power Eeprom]	• Internal memory fault, power card	
EnF	[Encoder]	• Encoder feedback fault	• Check [Number of pulses] (PGI) and [Encoder type] (EnS) page 75 • Check that the encoder's mechanical and electrical operation, its power supply and connections are all correct • If necessary, reverse the direction of rotation of the motor ([Output Ph rotation] (PHr) parameter, page 68) or the encoder signals
FCF1	[Out. contact. stuck]	• The output contactor remains closed although the opening conditions have been met	• Check the contactor and its wiring • Check the feedback circuit
Fd2	[Damper open]	• The damper remains open although the closing conditions have been met	• Check the damper and its wiring • Check the feedback circuit • Check the time delay for the function, page 174
HdF	[IGBT desaturation]	• Short-circuit or grounding at the drive output	• Check the cables connecting the drive to the motor, and the insulation of the motor • Perform the diagnostic tests via the [1.10 DIAGNOSTICS] menu.

Faults, which cannot be reset automatically (continued)

Fault	Name	Probable cause	Remedy
ILF	[internal com. link]	• Communication fault between option card and drive	• Check the environment (electromagnetic compatibility) • Check the connections • Check that no more than 2 option cards (max. permitted) have been installed on the drive • Replace the option card • Inspect/repair the drive
InF1	[Rating error]	• The power card is different from the card stored	• Check the reference of the power card
InF2	[Incompatible PB]	• The power card is incompatible with the control card	• Check the reference of the power card and its compatibility
InF3	[Internal serial link]	• Communication fault between the internal cards	• Check the internal connections • Inspect/repair the drive
InF4	[Internal MFG area]	• Internal data inconsistent	• Recalibrate the drive (performed by Schneider Electric Product Support)
InF6	[Internal-option]	• The option installed in the drive is not recognized	• Check the reference and compatibility of the option
InF7	[Internal-hard init.]	• Initialization of the drive is incomplete	• Turn off and reset
InF8	[Internal-ctrl supply]	• The control power supply is incorrect	• Check the control section power supply
InF9	[Internal- I measure]	• The current measurements are incorrect	• Replace the current sensors or the power card • Inspect/repair the drive
InFA	[Internal-mains circuit]	• The input stage is not operating correctly	• Perform the diagnostic tests via the [1.10 DIAGNOSTICS] menu. • Inspect/repair the drive
InFb	[Internal- th. sensor]	• The drive temperature sensor is not operating correctly • The braking unit's temperature sensor is not operating correctly	• Replace the temperature sensor • Inspect/repair the drive • Replace the braking unit's temperature sensor • Inspect/repair the braking unit • The monitoring of this fault must be disabled by the [Brake res. fault Mgt] (bUb) parameter, page 208 if there is no braking unit connected to the drive
InFC	[Internal-time meas.]	• Fault on the electronic time measurement component	• Inspect/repair the drive
InFE	[internal- CPU]	• Internal microprocessor fault	• Turn off and reset. Inspect/repair the drive
OCF	[Overcurrent]	• Parameters in the [SETTINGS] (SEt-) and [1.4 MOTOR CONTROL] (drC-) menus are not correct • Inertia or load too high • Mechanical locking	• Check the parameters • Check the size of the motor/drive/load • Check the state of the mechanism
PrF	[Power removal]	• Fault with the drive's "Power removal" safety function	• Inspect/repair the drive
SCF1	[Motor short circuit]	• Short-circuit or grounding at the drive output • Significant earth leakage current at the drive output if several motors are connected in parallel	• Check the cables connecting the drive to the motor, and the insulation of the motor • Perform the diagnostic tests via the [1.10 DIAGNOSTICS] menu. • Reduce the switching frequency • Connect chokes in series with the motor • Check the adjustment of speed loop and brake • If [Energy Sav.] (nLd) motor control type is used, change to an U/F type.
SCF2	[Impedant sh. circuit]		
SCF3	[Ground short circuit]		
SOF	[Overspeed]	• Instability or driving load too high	• Check the motor, gain and stability parameters • Add a braking resistor • Check the size of the motor/drive/load • Check the parameter settings for the [FREQUENCY METER] (FqF-) function, page 207, if it is configured

Faults, which cannot be reset automatically (continued)

Fault	Name	Probable cause	Remedy
SPF	[Speed fdback loss]	• Encoder feedback signal missing • No signal on "Pulse input", if the input is used for speed measurement	• Check the wiring between the encoder and the drive • Check the encoder • Check the wiring of the input and the detector used
tnF	[Auto-tuning]	• Special motor or motor whose power is not suitable for the drive • Motor not connected to the drive	• Check that the motor/drive are compatible • • Check that the motor is present during auto-tuning • If an output contactor is being used, close it during auto-tuning

Faults that can be reset with the automatic restart function, after the cause has disappeared

These faults can also be reset by turning on and off or by means of a logic input or control bit ([Fault reset] (rSF) parameter, page 192). APF, CnF, COF, EPF1, EPF2, FCF2, Fd1, LFF2, LFF3, LFF4, nFF, ObF, OHF, OLC, OLF, OPF1, OPF2, OSF, OtF1, OtF2, OtFL, PHF, PtF1, PtF2, PtFL, SLF1, SLF2, SLF3, SPIF, SSF, tJF, and ULF faults can be inhibited and cleared remotely by means of a logic input or control bit ([Fault inhibit assign.] (InH) parameter, page 203).

Fault	Name	Probable cause	Remedy
APF	[Application fault]	• Controller Inside card fault	• Please refer to the card documentation
CnF	[Com. network]	• Communication fault on communication card	• Check the environment (electromagnetic compatibility) • Check the wiring • Check the time-out • Replace the option card • Inspect/repair the drive
COF	[CAN com.]	• Interruption in communication on the CANopen bus	• Check the communication bus • Check the time-out • Refer to the CANopen User's Manual
EPF1	[External flt-LI/Bit]	• Fault triggered by an external device, depending on user	• Check the device, which caused the fault, and reset
EPF2	[External fault com.]	• Fault triggered by a communication network	• Check for the cause of the fault and reset
FCF2	[Out. contact. open.]	• The output contactor remains open although the closing conditions have been met.	• Check the contactor and its wiring • Check the feedback circuit
Fd1	[Damper stuck]	• The damper remains closed although the opening conditions have been met	• Check the damper and its wiring • Check the feedback circuit • Check the time delay for the function, page 174
LCF	[input contactor]	• The drive is not turned on even though [Mains V. time out] (LCt) has elapsed.	• Check the contactor and its wiring • Check the time-out • Check the line/contactor/drive connection
LFF2 LFF3 LFF4	[AI2 4-20mA loss] [AI3 4-20mA loss] [AI4 4-20mA loss]	• Loss of the 4-20 mA reference on analog input AI2, AI3 or AI4	• Check the connection on the analog inputs • If necessary, modify the fault configuration via [AIx 4-20mA loss] (LFLx), page 202
nFF	[No Flow Fault]	• Zero fluid	• Check and rectify the cause of the fault. • Check the zero fluid detection parameters page 183.
ObF	[Overbraking]	• Braking too sudden or driving load	• Increase the deceleration time • Install a braking resistor if necessary • Activate the [Dec ramp adapt.] (brA) function, page 134, if it is compatible with the application.
OHF	[Drive overheat]	• Power board -PCB over temperature • Braking unit over temperature • Phase module over temperature • Rectifier over temperature	• Check the motor load, the drive ventilation and the ambient temperature. Wait for the drive to cool down before restarting
OLC	[Proc. Overload Flt]	• Process overload	• Check and remove the cause of the overload. • Check the parameters of the [PROCESS UNDERLOAD] (OLd-) function, page 212.
OLF	[Motor overload]	• Triggered by excessive motor current	• Check the setting of the motor thermal protection, check the motor load. Wait for the drive to cool down before restarting
OPF1	[1 motor phase loss]	• Loss of one phase at drive output	• Check the connections from the drive to the motor

Faults that can be reset with the automatic restart function, after the cause has disappeared (continued)

Fault	Name	Probable cause	Remedy
OPF2	[3 motor phase loss]	• Motor not connected or motor power too low • Output contactor open • Instantaneous instability in the motor current	• Check the connections from the drive to the motor • If an output contactor is being used, parameterize [Output Phase Loss] (OPL) = [Output cut] (OAC), page 196 • Test on a low power motor or without a motor: In factory settings mode, motor phase loss detection is active [Output Phase Loss] (OPL) = [Yes] (YES). To check the drive in a test or maintenance environment, without having to use a motor with the same rating as the drive (in particular for high power drives), deactivate motor phase loss detection [Output Phase Loss] (OPL) = [No] (nO) • Check and optimize the [IR compensation] (UFr) page 73, [Rated motor volt.] (UnS) and [Rated mot. current] (nCr) parameters, page 65, and perform [Auto tuning] (tUn), page 67.
OSF	[Mains overvoltage]	• Line voltage too high • Disturbed line supply	• Check the line voltage
OtF1	[PTC1 overheat]	• Overheating of the PTC1 probes detected	• Check the motor load and motor size • Check the motor ventilation • Wait for the motor to cool before restarting • Check the type and state of the PTC probes
OtF2	[PTC2 overheat]	• Overheating of the PTC2 probes detected	
OtFL	[LI6=PTC overheat]	• Overheating of PTC probes detected on input LI6	
PtF1	[PTC1 probe]	• PTC1 probes open or short-circuited	• Check the PTC probes and the wiring between them and the motor/drive
PtF2	[PTC2 probe]	• PTC2 probes open or short-circuited	
PtFL	[LI6=PTC probe]	• PTC probes on input LI6 open or short-circuited	
SCF4	[IGBT short circuit]	• Power component fault	• Perform a test via the [1.10 DIAGNOSTICS] menu. • Inspect/repair the drive
SCF5	[Motor short circuit]	• Short-circuit at drive output	• Check the cables connecting the drive to the motor, and the motor's insulation • Perform tests via the [1.10 DIAGNOSTICS] menu. • Inspect/repair the drive
SLF1	[Modbus com.]	• Interruption in communication on the Modbus bus	• Check the communication bus • Check the time-out • Refer to the Modbus User's Manual
SLF2	[PC com.]	• Fault communicating with PC-Software	• Check the PC-Software connecting cable • Check the time-out
SLF3	[HMI com.]	• Fault communicating with the graphic display terminal	• Check the terminal connection • Check the time-out
SPIF	[PI Feedback]	• PID feedback below lower limit	• Check the PID function feedback. • Check the PID feedback supervision threshold and time delay, page 157.
SSF	[Torque/current lim]	• Switch to torque limitation	• Check if there are any mechanical problems • Check the parameters of [TORQUE LIMITATION] (tLA-) page 166 and the parameters of the [TORQUE OR I LIM. DETECT.] (tId-) fault, page 205).
tJF	[IGBT overheat]	• Drive overheated	• Check the size of the load/motor/drive • Reduce the switching frequency • Wait for the motor to cool before restarting
ULF	[Proc. Underload Flt]	• Process underload	• Check and remove the cause of the underload. • Check the parameters of the [PROCESS OVERLOAD] (ULd-) function, page 211.

Faults that can be reset as soon as their causes disappear

The USF fault can be inhibited and cleared remotely by means of a logic input or control bit ([Fault inhibit assign.] (InH) parameter, page 203).

Fault	Name	Probable cause	Remedy
CFF	[Incorrect config.]	• changed or removed • The current configuration is inconsistent	• Check that there are no card errors. • In the event of the option card being changed/removed deliberately, see the remarks below • Return to factory settings or retrieve the backup configuration, if it is valid (see page 224)
CFI	[Invalid config.]	• Invalid configuration The configuration loaded in the drive via the bus or communication network is inconsistent. • [Max frequency] (tFr) has been set at a value higher than 599Hz	• Check the configuration loaded previously • Load a compatible configuration • Set [Max frequency] (tFr) at a value lower or equal to 599 Hz
HCF	[Cards pairing]	• The [CARDS PAIRING] (PPI-) function, page 209, has been configured and a drive card has been changed	• In the event of a card error, reinsert the original card • Confirm the configuration by entering the [Pairing password] (PPI) if the card was changed deliberately
PHF	[Input phase loss]	• Drive incorrectly supplied or a fuse blown • Failure of one phase • 3-phase ATV61 used on a single-phase line supply • Unbalanced load This protection only operates with the drive on load	• Check the power connection and the fuses. • Use a 3-phase line. • Disable the fault by [Input phase loss] (IPL) = [No] (nO). (page 197)
PrtF	[Power Ident]	• The [Power Identification] (Prt) parameter, page 74, is incorrect. • Control card replaced by a control card configured on a drive with a different rating	• Enter the correct parameter (reserved for Schneider Electric product support). • Check that there are no card errors. • In the event of the control card being changed deliberately, see the remarks below
USF	[Undervoltage]	• Line supply too low • Transient voltage dip • Damaged pre-charge resistor • This protection only operates with the drive running in motor mode	• Check the voltage and the parameters of [UNDERVOLTAGE MGT] (USb-), page 200 • Replace the pre-charge resistor • Inspect/repair the drive

Option card changed or removed

When an option card is removed or replaced by another, the drive locks in [Incorrect config.] (CFF) fault mode on power-up. If the card has been deliberately changed or removed, the fault can be cleared by pressing the ENT key twice, which **causes the factory settings to be restored** (see page 224) for the parameter groups affected by the card. These are as follows:

Card replaced by a card of the same type

- I/O cards: [Drive configuration] (drV)
- Encoder cards: [Drive configuration] (drV)
- Communication cards: Only the parameters that are specific to communication cards
- Controller Inside cards: [Prog. card menu] (PLC)

Card removed (or replaced by a different type of card)

- I/O card: [Drive configuration] (drV)
- Encoder card: [Drive configuration] (drV)
- Communication card: [Drive configuration] (drV) and parameters specific to communication cards
- Controller Inside card: [Drive configuration] (drV) and [Prog. card menu] (PLC)

Control card changed

When a control card is replaced by a control card configured on a drive with a different rating, the drive locks in [Power Ident] (PrtF) fault mode on power-up. If the card has been deliberately changed, the fault can be cleared by modifying the [Power Identification] (Prt) parameter, page 74, which **causes all the factory settings to be restored.**

[1.1 SIMPLY START] (SIM-) menu

Code	Name	Factory setting	Customer setting
tCC	[2/3 wire control]	[2 wire] (2C)	
CFG	[Macro configuration]	[Start/Stop] (StS)	
bFr	[Standard mot. freq]	[50 Hz] (50)	
IPL	[Input phase loss]	According to drive rating	
nPr	[Rated motor power]	According to drive rating	
UnS	[Rated motor volt.]	According to drive rating	
nCr	[Rated mot. current]	According to drive rating	
FrS	[Rated motor freq.]	50 Hz	
nSP	[Rated motor speed]	According to drive rating	
tFr	[Max frequency]	60 Hz	
PHr	[Output Ph rotation]	ABC	
ItH	[Mot. therm. current]	According to drive rating	
ACC	[Acceleration]	3.0 s	
dEC	[Deceleration]	3.0 s	
LSP	[Low speed]	0	
HSP	[High speed]	50 Hz	

Functions assigned to I/O

Inputs Outputs	Functions assigned
LI1	
LI2	
LI3	
LI4	
LI5	
LI6	
LI7	
LI8	
LI9	
LI10	
LI11	
LI12	
LI13	
LI14	

Inputs Outputs	Functions assigned
LO1	
LO2	
LO3	
LO4	
AI1	
AI2	
AI3	
AI4	
R1	
R2	
R3	
R4	
RP	
Encoder	

Other parameters (table to be created by the user)

Code	Name	Customer setting

Code	Name	Customer setting

Index of functions

+/- speed	143
+/- speed around a reference	145
[2 wire] (2C)	35
[2nd CURRENT LIMIT.]	168
[3 wire] (3C)	35
[AUTO DC INJECTION]	137
[Auto tuning]	37
[AUTO TUNING BY LI]	181
[AUTOMATIC RESTART]	193
[CATCH ON THE FLY]	194
Command and reference channels	111
Damper control	173
Deferred stop on thermal alarm	198
Direct power supply via DC bus	186
[DRIVE OVERHEAT]	197
[ENCODER CONFIGURATION]	94
[1.12 FACTORY SETTINGS] (FCS-)	222
[FAULT RESET]	192
Flow limitation	184
[FLUXING BY LI]	148
[JOG]	139
[1.7 APPLICATION FUNCT.] (FUn-)	169
[1.4 MOTOR CONTROL] (drC-)	75
Motor or configuration switching [MULTIMOTORS/CONFIG.]	178
Motor thermal protection	195
[Noise reduction]	78
Output contactor command	171
Parameter set switching [PARAM. SET SWITCHING]	175
[4. PASSWORD] (COd-)	229
PID feedback supervision	156
PID regulator	149
Preset speeds	140
Process overload fault	212
Process underload fault	210
PTC probes	190
[RAMP]	131
Reference saving:	147
[REFERENCE SWITCH.]	129
[REGEN CONNECTION]	187
[RP CONFIGURATION]	92
Skip frequencies	62
Sleep/Wake-up	159
[1.7 APPLICATION FUNCT.] (FUn-)	162
[STOP CONFIGURATION]	135
Summing input/Subtracting input/Multiplier	128
Torque limitation	165
Use of the "Pulse input" to measure the speed of rotation of the motor	206
Zero fluid or zero flow detection via sensor	182

Code	Page										
	[1.1 SIMPLY START] (SIM-)	[1.2 MONITORING] (SUP-)	[1.3 SETTINGS] (SET-)	[1.4 MOTOR CONTROL] (drC-)	[1.5 INPUTS / OUTPUTS CFG] (I-O-)	[1.6 COMMAND] (CtL-)	[1.7 APPLICATION FUNCT.] (FUn-)	[1.8 FAULT MANAGEMENT] (FLt-)	[1.9 COMMUNICATION] (COM-)	[1.12 FACTORY SETTINGS] (FCS-)	[4 PASSWORD] (COd-)
AIC-					109						
A2C-					109						
A3C-					109						
AC2			49				133 146 155				
ACC	38		49				131				
AdC							137				
AdCO									217		
Add									217		
AI1A		46			87						
AI1E					87						
AI1F					87						
AI1S					87						
AI1t					87						
AI2A		46			88						
AI2E					88						
AI2F					88						
AI2L					88						
AI2S					88						
AI2t					88						
AI3A		46			89						
AI3E					89						
AI3F					89						
AI3L					89						
AI3S					89						
AI3t					89						
AI4A		46			90						
AI4E					90						
AI4F					90						
AI4L					90						
AI4S					90						
AI4t					90						
AIC1					91		153				
ALGr		47									
AMOA									217		
AMOC									217		

Code	Page										
	[1.1 SIMPLY START] (SIM-)	[1.2 MONITORING] (SUP-)	[1.3 SETTINGS] (SET-)	[1.4 MOTOR CONTROL] (drC-)	[1.5 INPUTS / OUTPUTS CFG] (I-O-)	[1.6 COMMAND] (CtL-)	[1.7 APPLICATION FUNCT.] (FUn-)	[1.8 FAULT MANAGEMENT] (FLt-)	[1.9 COMMUNICATION] (COM-)	[1.12 FACTORY SETTINGS] (FCS-)	[4 PASSWORD] (COd-)
AO1					105						
AO1F					106						
AO1t					105						
AO2					107						
AO2F					107						
AO2t					107						
AO3					108						
AO3F					108						
AO3t					108						
AOH1					105						
AOH2					107						
AOH3					108						
AOL1					105						
AOL2					107						
AOL3					108						
ASH1					106						
ASH2					107						
ASH3					108						
ASL1					106						
ASL2					107						
ASL3					108						
Atr								193			
AUt				67							
bbA				80							
bdCO									217		
bFr	36		65								
brA							134				
brD								208			
brP								208			
brU								208			
bSP					85						
bUb								208			
CCFG	35										
CCS						120					
Cd1						120					
Cd2						120					

Code	Page										
	[1.1 SIMPLY START] (SIM-)	[1.2 MONITORING] (SUP-)	[1.3 SETTINGS] (SEt-)	[1.4 MOTOR CONTROL] (drC-)	[1.5 INPUTS / OUTPUTS CFG] (I-O-)	[1.6 COMMAND] (CtL-)	[1.7 APPLICATION FUNCT.] (FUn-)	[1.8 FAULT MANAGEMENT] (FLt-)	[1.9 COMMUNICATION] (COM-)	[1.12 FACTORY SETTINGS] (FCS-)	[4 PASSWORD] (COd-)
CFG	35										
CFPS		47									
CHA1							176				
CHA2							176				
CHCF						119					
CHI							185				
CHM							181				
CHt			63				185				
CL2			55				168				
CLI			55	77			168				
CLL								204			
CLO-		47									
CnF1							181				
CnF2							181				
CnFS		47									
COd											230
COd2											230
COL								204			
COP						121					
CrH2					88						
CrH3					89						
CrH4					90						
CrL2					88						
CrL3					89						
CrL4					90						
CSt											230
Ctd			60								
CtdL			60								
Ctt				69							
dA2							130				
dA3							130				
dAM							174				
dAS							172				
dbS							172				
dCF			53				135	214			
dCI							136				

Code	Page										
	[1.1 SIMPLY START] (SIM-)	[1.2 MONITORING] (SUP-)	[1.3 SETTINGS] (SET-)	[1.4 MOTOR CONTROL] (drC-)	[1.5 INPUTS / OUTPUTS CFG] (I-O-)	[1.6 COMMAND] (CtL-)	[1.7 APPLICATION FUNCT.] (FUn-)	[1.8 FAULT MANAGEMENT] (FLt-)	[1.9 COMMUNICATION] (COM-)	[1.12 FACTORY SETTINGS] (FCS-)	[4 PASSWORD] (COd-)
dCO							186				
dE2			49				133, 146				
dEC	38		49				131				
dFb							174				
dFL			63				185				
dLr											230
dOI					102						
dOId					102						
dOIH					102						
dOIS					102						
dOtd			136								
dSI							146				
dSP							144				
EFI					95						
EFr					95						
EIL					95						
EnC				76	94						
EnS				75	94						
EnU				76	95						
EPL								199			
ErCO									217		
EtF								199			
FI				70							
F2				70							
F2d			60								
F2dL			60								
F3				70							
F4				71							
F5				71							
Fbtd							174				
FCP				71							
FCSI										224	
FdL								213			
Fdt								207			
FFd			63				164				

Code	Page										
	[1.1 SIMPLY START] (SIM-)	[1.2 MONITORING] (SUP-)	[1.3 SETTINGS] (SET-)	[1.4 MOTOR CONTROL] (drC-)	[1.5 INPUTS / OUTPUTS CFG] (I-O-)	[1.6 COMMAND] (CtL-)	[1.7 APPLICATION FUNCT.] (FUn-)	[1.8 FAULT MANAGEMENT] (FLt-)	[1.9 COMMUNICATION] (COM-)	[1.12 FACTORY SETTINGS] (FCS-)	[4 PASSWORD] (COd-)
FFt			61				135				
FLI							148				
FLO									218		
FLOC									218		
FLOt									218		
FLr								194			
FLU			56				148				
FPI							155				
F9A								207			
F9C								207			
F9F								207			
F9L			60								
F9S		45, 47									
Fr1						119					
Fr1b							129				
Fr2						120					
FrH		47									
FrS	36		65								
FrSS				72							
Frt							133				
Fry-										224	
FSt							135				
Ftd			60								
FtdL			60								
FtO			63					212			
FtU			62					211			
GFS										224	
HSP	38		50								
IdA				74							
IdC			53				136	214			
IdC2			53				136	214			
IdM				74							
InH								203			
InHr								203			
InHS								203			
Inr			49				131				

Code	Page										
	[1.1 SIMPLY START] (SIM-)	[1.2 MONITORING] (SUP-)	[1.3 SETTINGS] (SET-)	[1.4 MOTOR CONTROL] (drC-)	[1.5 INPUTS / OUTPUTS CFG] (I-O-)	[1.6 COMMAND] (CtL-)	[1.7 APPLICATION FUNCT.] (FUn-)	[1.8 FAULT MANAGEMENT] (FLt-)	[1.9 COMMUNICATION] (COM-)	[1.12 FACTORY SETTINGS] (FCS-)	[4 PASSWORD] (COd-)
IntP							166				
IPHr		47									
IPL	36							197			
IPr		47									
ItH	38		50								
JF2			62								
JF3			62								
JFH			62								
JGF			56				139				
JGt			56				139				
JOG							139				
JPF			62								
LI1A to LI14A		46			83						
LI1d to LI14d					83						
LC2							168				
LCr		47									
LCt							170				
LdS				72							
LES							170				
LEt								199			
LFA				74							
LFd			63				164				
LFF							157	214			
LFL2 LFL3 LFL4								202			
LFM				74							
LIS1		46									
LIS2		46									
LLC							170				
LnS							183				
LO1					100						
LO1d					100						
LO1H					100						
LO1S					100						
LO2					100						

Code	Page										
	[1.1 SIMPLY START] (SIM-)	[1.2 MONITORING] (SUP-)	[1.3 SETTINGS] (SET-)	[1.4 MOTOR CONTROL] (drC-)	[1.5 INPUTS / OUTPUTS CFG] (I-O-)	[1.6 COMMAND] (CtL-)	[1.7 APPLICATION FUNCT.] (FUn-)	[1.8 FAULT MANAGEMENT] (FLt-)	[1.9 COMMUNICATION] (COM-)	[1.12 FACTORY SETTINGS] (FCS-)	[4 PASSWORD] (COd-)
LO2d					100						
LO2H					100						
LO2S					100						
LO3					101						
LO3d					101						
LO3H					101						
LO3S					101						
LO4					101						
LO4d					101						
LO4H					101						
LO4S					101						
LOC			63					212			
LPI			59				157				
LrS				72							
LSP	38		50				160				
LUL			62					211			
LUn			62					211			
MA2							130				
MA3							130				
MFr		47									
MMF		45, 47									
MPI							157				
nCA1									216		
nCA2									216		
nCA3									216		
nCA4									216		
nCA5									216		
nCA6									216		
nCA7									216		
nCA8									216		
nCr	36		65								
nCrS				72							
nFd							164				
nFFt			63				183				
nFS							183				
nFSt			63				183				

Code	Page										
	[1.1 SIMPLY START] (SIM-)	[1.2 MONITORING] (SUP-)	[1.3 SETTINGS] (SET-)	[1.4 MOTOR CONTROL] (drC-)	[1.5 INPUTS / OUTPUTS CFG] (I-O-)	[1.6 COMMAND] (CtL-)	[1.7 APPLICATION FUNCT.] (FUn-)	[1.8 FAULT MANAGEMENT] (FLt-)	[1.9 COMMUNICATION] (COM-)	[1.12 FACTORY SETTINGS] (FCS-)	[4 PASSWORD] (COd-)
nMA1									216		
nMA2									216		
nMA3									216		
nMA4									216		
nMA5									216		
nMA6									216		
nMA7									216		
nMA8									216		
nPr	36		65								
nrd				78							
nSL				74							
nSP	36		66								
nSPS				72							
nSt							135				
oO6		47									
oO2		47									
oO3		47									
oO4		47									
oO5		47									
OCC							172				
OdL								212			
Odt								196			
OFI				77							
OHL								197			
OLL								196			
OPL								196			
OPr		47									
Otr		47									
OIr							187				
PAH			58				154				
PAL			58				154				
PAU							155				
PEr			59				154				
PEt		47									
PFI					92						
PFL				70							

Code	Page										
	[1.1 SIMPLY START] (SIM-)	[1.2 MONITORING] (SUP-)	[1.3 SETTINGS] (SET-)	[1.4 MOTOR CONTROL] (drC-)	[1.5 INPUTS / OUTPUTS CFG] (I-O-)	[1.6 COMMAND] (CtL-)	[1.7 APPLICATION FUNCT.] (FUn-)	[1.8 FAULT MANAGEMENT] (FLt-)	[1.9 COMMUNICATION] (COM-)	[1.12 FACTORY SETTINGS] (FCS-)	[4 PASSWORD] (COd-)
PFr					92						
PGA					95						
PGI				75	95						
PHS				72							
PHr	37			68							
PIA					92						
PIC							154				
PIF							153				
PIF1							153				
PIF2							153				
PII							153				
PIL					92						
PIM							155				
PIP1							153				
PIP2							153				
PIS							154				
POH			58				154				
POL			58				154				
PPI								209			
PPn				74							
PPnS				72							
Pr2							158				
Pr4							158				
PrP			58				154				
Prt				74							
PS1-							176				
PS2-							177				
PS3-							177				
PS2							141				
PS4							141				
PS8							141				
PSr			59				155				
PSt						119					
PtC1								191			
PtC2								191			
PtCL								191			

Code	Page										
	[1.1 SIMPLY START] (SIM-)	[1.2 MONITORING] (SUP-)	[1.3 SETTINGS] (SET-)	[1.4 MOTOR CONTROL] (drC-)	[1.5 INPUTS / OUTPUTS CFG] (I-O-)	[1.6 COMMAND] (CtL-)	[1.7 APPLICATION FUNCT.] (FUn-)	[1.8 FAULT MANAGEMENT] (FLt-)	[1.9 COMMUNICATION] (COM-)	[1.12 FACTORY SETTINGS] (FCS-)	[4 PASSWORD] (COd-)
PtH		47									
rI					96						
rId					98						
rIH					98						
rIS					98						
r2					98						
r2d					98						
r2H					98						
r2S					98						
r3					99						
r3d					99						
r3H					99						
r3S					99						
r4					99						
r4d					99						
r4H					99						
r4S					99						
rCA							172				
rCb							129				
rCHt			63				185				
rdG			58				154				
rFC						120					
rFr		47									
rIG			58				154				
rIn						119					
rMUd			62					211			
rP								192			
rP2			59				158				
rP3			59				158				
rP4			59				158				
rPA								192			
rPC		47									
rPE		47									
rPF		47									
rPG			58				153				
rPI							153				

Code	Page										
	[1.1 SIMPLY START] (SIM-)	[1.2 MONITORING] (SUP-)	[1.3 SETTINGS] (SET-)	[1.4 MOTOR CONTROL] (drC-)	[1.5 INPUTS / OUTPUTS CFG] (I-O-)	[1.6 COMMAND] (CtL-)	[1.7 APPLICATION FUNCT.] (FUn-)	[1.8 FAULT MANAGEMENT] (FLt-)	[1.9 COMMUNICATION] (COM-)	[1.12 FACTORY SETTINGS] (FCS-)	[4 PASSWORD] (COd-)
rPO		47									
rPS							133				
rPt							131				
rrS					82						
rSA				74							
rSAS				72							
rSF								192			
rSL							160				
rSM				74							
rSMS				72							
rtd			61								
rtdL			61								
rtH		47									
SA2							130				
SA3							130				
SAt								198			
SCS1										224	
SdC1			54				137				
SdC2			54				137				
SFC			50								
SFr			55	77							
SIt			50								
SLE			56				160				
SLL								204			
SLP			53	73							
SOP				78							
SP2			57				142				
SP3			57				142				
SP4			57				142				
SP5			57				142				
SP6			57				142				
SP7			57				142				
SP8			57				142				
SPd		47									
SPG			50								
SPM							147				

Code	Page										
	[1.1 SIMPLY START] (SIM-)	[1.2 MONITORING] (SUP-)	[1.3 SETTINGS] (SET-)	[1.4 MOTOR CONTROL] (drC-)	[1.5 INPUTS / OUTPUTS CFG] (I-O-)	[1.6 COMMAND] (CtL-)	[1.7 APPLICATION FUNCT.] (FUn-)	[1.8 FAULT MANAGEMENT] (FLt-)	[1.9 COMMUNICATION] (COM-)	[1.12 FACTORY SETTINGS] (FCS-)	[4 PASSWORD] (COd-)
Srb			62					211, 212			
SrP			58				146				
SSb								205			
StM								201			
StO								205			
StP								200			
Str							144				
Strt								201			
Stt							135				
SUL				78							
tA1			49				132				
tA2			49				132				
tA3			49				132				
tA4			50				132				
tAA							166				
tAC		47									
tAr								193			
tbr									217		
tbr2									217		
tbS								201			
tCC	35				82						
tCd							174				
tCt					82						
td1			53				136	214			
tdC			53				136	214			
tdC1			54				137				
tdC2			54				138				
tdS								207			
tFO									217		
tFO2									217		
tFr	36		66								
tHA								197, 198			
tHb		47									
tHd		47									

Code	Page										
	[1.1 SIMPLY START] (SIM-)	[1.2 MONITORING] (SUP-)	[1.3 SETTINGS] (SET-)	[1.4 MOTOR CONTROL] (drC-)	[1.5 INPUTS / OUTPUTS CFG] (I-O-)	[1.6 COMMAND] (CtL-)	[1.7 APPLICATION FUNCT.] (FUn-)	[1.8 FAULT MANAGEMENT] (FLt-)	[1.9 COMMUNICATION] (COM-)	[1.12 FACTORY SETTINGS] (FCS-)	[4 PASSWORD] (COd-)
tHr		47									
tHt								196			
tLA							166				
tLC							167				
tLIG			60				166				
tLIM			60				166				
tLS			56				160				
tOd							174				
tOL								212			
tPI			59				157				
tPIG							167				
tPIM							167				
trA				74							
trM				74							
tSM								201			
ttd			61					196, 198			
ttd2								196, 198			
ttd3								196, 198			
ttH			60								
ttL			60								
ttO								217			
tUL							181				
tUn	37			67							
tUS	37			68							
U0				70							
U1				70							
U2				70							
U3				70							
U4				71							
U5				71							
Ubr				80							
UC2				71							
UCb								194			
UdL								211			

Code	Page										
	[1.1 SIMPLY START] (SIM-)	[1.2 MONITORING] (SUP-)	[1.3 SETTINGS] (SET-)	[1.4 MOTOR CONTROL] (drC-)	[1.5 INPUTS / OUTPUTS CFG] (I-O-)	[1.6 COMMAND] (CtL-)	[1.7 APPLICATION FUNCT.] (FUn-)	[1.8 FAULT MANAGEMENT] (FLt-)	[1.9 COMMUNICATION] (COM-)	[1.12 FACTORY SETTINGS] (FCS-)	[4 PASSWORD] (COd-)
UCP				71							
UFr			53	73							
UIH1					87						
UIH2					88						
UIH4					90						
UIL1					87						
UIL2					88						
UIL4					90						
ULn		47									
ULr											230
ULt								211			
UnS	36		65								
UOH1					105						
UOH2					107						
UOH3					108						
UOL1					105						
UOL2					107						
UOL3					108						
UOP		47									
UPL								201			
UPP							161				
UrES								200			
USb								200			
USI							146				
USL								200			
USP							144				
USt								200			

ATV61_programming_manual_EN_1760649_08

02/2013