Push Button and Operator Interface - Type B and 30 mm Control Stations
Types KY and KZC Security Control Stations — Application Data, Features

Standard Features

- All cylinders are random keyed.
- Key operators are all spring return from both sides to center, maintained contact not available.
- Key withdrawal is in the center position only.
- Cover is mechanically interlocked with the box to make it difficult for unauthorized people to gain entrance into the enclosure.
- Cover is securely held in place by allen screws.
- Cylinders are of builders hardware type, which permits keying stations to the rest of the cylinders in a development.
- Cylinder legend plate marking is “OPEN-CLOSE.”
- An optional push button is available. The legend plate marking is “STOP.”

Description	Type of Cylinder	Cylinder Finish	Special Features	Cast Aluminum Enclosure ✻	Satin Chrome Finish Flush Mtd. W/Box
				Type	Type
Key Operator Only	Emhart	Chrome		KY198	KZC198
	Yale	Brass		KY199	KZC199
	Best	Chrome	Complete With Core◆ (6 Tumbler Pins)	KY197	KZC197
	Best	Chrome	Lock Cylinder Only - Core Omitted▲ (6 Tumbler Pins)	KY196	KZC196
	Best	Chrome	Complete With Core◆ (7 Tumbler Pins)	KY195	KZC195
	Best	Chrome	Lock Cylinder Only - Core Omitted▲ (7 Tumbler Pins)	KY194	KZC194
	Schlage	Chrome		KY193	KZC193
	Sargent	Chrome	Maximum Security Cylinder	KY192	KZC192
Key Operator With Stop Button	Emhart	Chrome		KY298	KZC298
	Yale	Brass		KY299	KZC299
	Best	Chrome	Complete With Core◆ (6 Tumbler Pins)	KY297	KZC297
	Best	Chrome	Lock Cylinder Only - Core Omitted▲ (6 Tumbler Pins)	KY296	KZC296
	Best	Chrome	Complete With Core◆ (7 Tumbler Pins)	KY295	KZC295
	Best	Chrome	Lock Cylinder Only - Core Omitted▲ (7 Tumbler Pins)	KY294	KZC294
	Schlage	Chrome		KY293	KZC293
	Sargent	Chrome	Maximum Security Cylinder	KY292	KZC292

✻ Meets NEMA Type 3R requirements.
◆ When Best Lock stations are supplied with core, customer should contact local Best Lock representative to change core.
▲ When Best Lock stations are supplied without core, customer must purchase core separately from Best Lock Company, and customer can subsequently change core at his convenience.

Contact Your Local Square D Sales Office If:

- Master keying is required.
- Keying several stations alike is required.
- Station is to be keyed to a specific key number.
- Nonstandard legend plates are required.
- Extra keys are required.
- A specific type of keyway is required.

Repair Parts

Replacement or duplicate keys: Emhart, Yale, or Schlage - local distributor, hardware store, or lock shop that duplicates keys. Square D can supply and deliver in 5 weeks. BEST – Must purchase from local Best Lock Corporation representative. Sargent – must purchase from Square D. Keys supplied with our security control station are registered to the Square D Company.

Type KY192

Type KZC299

UL Listed
File E42259
CNN NKCR

CSA Certified
File LR25490
Class 321103

Electrical Ratings

Key Operator: One Class 9007 Type AO2 snap switch is used for the “OPEN” position and one snap switch is used for the “CLOSE” position. See page 191 for electrical ratings of the 9007 AO2.

Stop Button: One Class 9001 Type KA1 contact block is used on the optional push button. See page 191 for 9001KA1 electrical ratings. **(Note: The KA1 contact block has a maximum voltage rating of 300 volts (NEMA / UL A300) when used in the Type KZC station.)**

Dimensions

Surface Mount Type KY

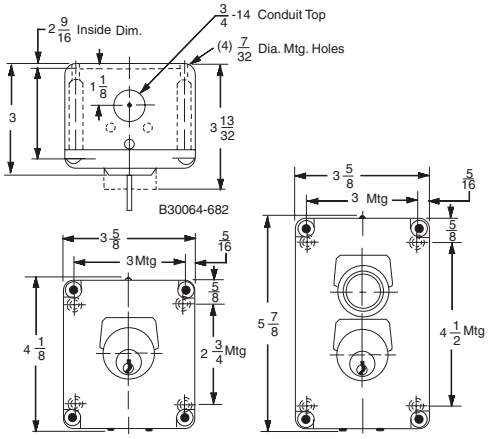

Flush Mount Type KZC

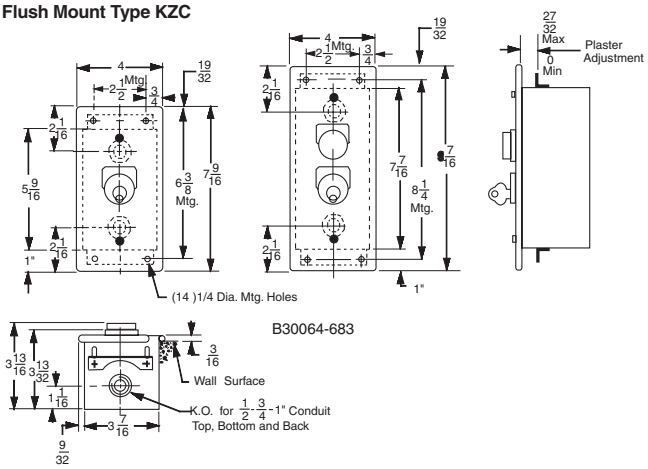

Replacement enclosures are not sold. Replacement cores or cylinders are not sold.

© 1999-2005 Schneider Electric All Rights Reserved